CITY OF DOVER

# DOVER PLANNING BOARD – AGENDA

| | |
|---|---|
| Meeting Type: | Regular Meeting |
| Meeting Location: | Council Chambers, City Hall, 288 Central Ave, Dover NH 03820 |
| Meeting Date: | **Tuesday, May 8, 2018** |
| Meeting Time: | **7:00 pm** |

## 1. CITIZENS' FORUM

## 2. APPROVAL OF THE PRIOR MINUTES

- April 24, 2018 Workshop Meeting Minutes
- April 24, 2018 Regular Meeting Minutes

## 3. OLD BUSINESS

A. Review amendments to Chapter 149, entitled "Site Review Regulations" to revise landscaping requirements.

## 4. NEW BUSINESS

A. Consideration and acceptance of a Lot Line Adjustment for 6 Grove Street Residences LLC, (Owners: 6 Grove Street Residences & Gotham Holdings, LLC), Assessor's Map 31, Lot 14 & 14D-1, zoned CBD-TOD, and located at 6 Grove Street. *(P16-31A)

B. Consideration and acceptance of a Conditional Use Permit for 6 Grove Street Residences LLC, (Owners: 6 Grove Street Residences & Gotham Holdings, LLC) Assessor's Map 31, Lot 14, zoned CBD-TOD, and located at 6 Grove Street. (Proposal is to allow a two story structure where a minimum of three stories is required, and to provide less than the minimum 75% required lot coverage.) *(P16-31B)

C. Consideration and acceptance of a Site Plan Amendment for 6 Grove Street Residences LLC, (Owners: 6 Grove Street Residences & Gotham Holdings LLC), Assessor's Map 31, Lot 14, zoned CBD-TOD, and located at 6 Grove Street. (Proposal is to convert an existing building into 32 residential rental units and 8,967 sq. ft. of commercial space and construct 6 townhouses units. The proposal will also include 39 on-site parking spaces). *(P16-31C)

D. Consideration and acceptance of a Minor Lot Line Adjustment for Bean Family Trust, (Owners: Daniel P. Irish and Kristopher & Elizabeth M. Reischer), Assessor's Map A, Lots 45-2, 45A-2-1 & 45A-2-3, zoned R-40, and located at 12, 22, & 32 Olive Meadow Lane. *(P18-18)

E. Consideration and acceptance of a Major Subdivision with Transfer of Development Rights for TDAK & Company LLC, Assessor's Map 35, Lot 57, zoned R-12, located at 99 Sixth Street. (Proposal is to construct a 345 ft. private roadway to access the existing two unit condominiums as well as new construction for four additional single family detached homes). *(P18-07)

F. Consideration and acceptance of a Conditional Use Permit for TDAK & Company LLC, Assessor's Map 35, Lot 57, zoned R-12, and located at 99 Sixth Street. (Propoosal is to construct a 345 ft private roadway impacting areas of the parcel containing 20% slopes). *(P18-19)

## 5. STAFF COMMENT

## 6. MEMBER COMMENTS

## 7. ADJOURNMENT

*Indicates that if the application is accepted for discussion, the public hearing will be held the same evening. Note that some hearings will be continued from one meeting to another and some may be postponed. Since this is only a partial description of the proposal and may change, persons with questions or wishing to see the plans are invited to visit the Planning Office, Monday through Thursday from 8:30 am to 5:30 pm and Friday 8:30 am to 4:00 pm or email Dover-Planning@dover.nh.gov. You may also view materials at www.dover.nh.gov. Follow us on Twitter @DoverNHPlanning and find us on Facebook at https://www.facebook.com/DoverNHPlanning.

# DOVER PLANNING BOARD WORKSHOP – MINUTES

CITY OF DOVER

| | |
|---|---|
| Meeting Type: | Regular Meeting |
| Meeting Location: | Council Chambers – City Hall, 288 Central Avenue |
| Meeting Date: | **Tuesday, April 24, 2018** |
| Meeting Time: | **6:00 pm** |

**Members Present:** Frank Torr, Dave White, Gina Cruikshank (Vice Chair), David Landry, Lee Skinner, James Burdin, Hayley Harmon (Alternate)

**Members Not Present**: Kirt Schuman (Chair), Sarah Wheeler (Alternate), Tom Clark, Tristan Donovan (Alternate), Dennis Ciotti (Councilor)

**Staff Present:** Christopher Parker, Assistant City Manager, Steve Bird, City Planner, Dave Carpenter, Community Development Planner, Elena Piekut, Assistant City Planner.

The Vice Chair called the meeting to order at 6:00 p.m, and announced that H.Harmon would sit in for K.Schuman.

## 1. SUMMARY OF ZONING AMENDMENTS

C.Parker reviewed the zoning amendments the Board has posted and discussed some potential changes that should be discussed. The list of amendments is:

- Amend definitions for Build To Line, Building and delete Business Frontage
- Rename the B-5 District to avoid confusion with Downtown Gateway
- Amend Use Regulations to remove site review applicability
- Amend B-3, B-4 and B-5 district front setback to be closer to ROW
- Correct a footnote in the HR table
- Amend nonconforming lot provisions
- Amend to rename "Open Space" and update requirements relative to mixed uses
- Amend dimensional regulations for accessible additions to not require the Building Inspector to notify abutters
- Revise Central Business District regulations to clarify uses allowed on first floor and height in general district
- Amend Impact Fees ordinance
- Correct reference in floodplain ordinance
- Amend Cons District calculation for min lot size
- Revise TDR regulations to encourage affordable single family homes
- Amend rebuild for damage for nonconforming structures
- Amend prohibition on repairs for nonconforming structures
- Discussion ensued regarding delegating authority to Housing Standards Board

## 2. PUBLIC COMMENTS ON CHAPTER 170, ENTITLED "ZONING" OF THE CODE OF THE CITY OF DOVER. AMENDMENTS INCLUDE REVISING AND ADDING DEFINITIONS, RENAMING THE GATEWAY DISTRICT, REVISING SETBACKS IN THE B-3, B-4 AND B-5 DISTRICTS, UPDATING REFERENCES WITHIN THE CHAPTER, AND CODE, REVISING NON-CONFORMING LOT AND USE PROVISIONS, UPDATING OPEN SPACE PROVISIONS DIMENSIONAL REGULATIONS, REVISING THE CENTRAL BUSINESS DISTRICT SECTION, REVISING THE IMPACT FEE ORDINANCE, REVISING THE TRANSFER OF DEVELOPMENT RIGHT'S ORDINANCE TO PROMOTE AFFORDABLE HOUSING. THE FULL TEXT OF THE AMENDMENTS IS AVAILABLE IN PLANNING DEPARTMENT AND AT WWW.DOVER.NH.GOV LOCATED UNDER CITY DOCUMENTS & VIEW CURRENT CITY REPORTS.

No one spoke.

D.Ciotti arrived at 6:40.

Discussion ensued regarding 1000 sf units vs 1400 sf units. Staff will review options for encouraging smaller units.

Discussion ensued regarding promoting affordable apartment units in the Central Business District. Staff to review options.

## 3. ADJOURNMENT

**Motion:** D.White made a motion to adjourn at 6:44 p.m. Seconded by D.Ciotti. Vote U/A

# DOVER PLANNING BOARD – MINUTES

CITY OF DOVER

| | |
|---|---|
| Meeting Type: | Regular Meeting |
| Meeting Location: | Council Chambers – City Hall, 288 Central Avenue |
| Meeting Date: | **Tuesday, April 24, 2018** |
| Meeting Time: | **7:00 pm** |

**Members Present:** Frank Torr, Dave White, Dennis Ciotti (Councilor), Gina Cruikshank (Vice Chair), David Landry, Lee Skinner, James Burdin, Hayley Harmon (Alternate)

**Members Not Present**: Kirt Schuman (Chair), Sarah Wheeler (Alternate), Tom Clark, Tristan Donovan (Alternate)

**Staff Present:** Christopher Parker, Assistant City Manager, Steve Bird, City Planner, Dave Carpenter, Community Development Planner, Elena Piekut, Assistant City Planner.

The Vice Chair called the meeting to order at 7:00 p.m, and announced that H.Harmon would sit in for K.Schuman.

## 1. CITIZENS' FORUM

*Citizens Forum Open. Nobody Spoke. Citizens Forum Closed.*

## 2. APPROVAL OF THE PRIOR MINUTES

- April 10, 2018 Regular Meeting Minutes

**Motion:** F.Torr made a motion to approve the minutes as presented. Seconded by D.White. Vote U/A

## 3. OLD BUSINESS

A. Public Hearing to consider amendments to Chapter 149, entitled "Site Review Regulations" of the code of the City of Dover. Amendments include revising terminology, administrative review process, certificate of occupancy requirements, lighting standards, driveway regulations, and updating definitions. The full text of the amendments is available in Planning Department & at www.dover.nh.gov located under City Documents & View Current City Reports.

The Chair opened the public hearing Nobody Spoke. The Chair closed the public hearing

**Motion:** D.White made a motion to table the amendments for discussion in May. Seconded by L.Skinner. Vote U/A

B. Public Hearing to consider amendments to Chapter 155, entitled "Subdivision of Land" of the code of the City of Dover. Amendments include the merging driveway regulations into the chapter, revising terminology, certificate of occupancy requirements and renumbering sections. The full text of the amendments is available in Planning Department & at www.dover.nh.gov located under City Documents & View Current City Reports.

The Chair opened the public hearing Nobody Spoke. The Chair closed the public hearing

Discussion ensued regarding grammatical amendments to the text.

**Motion:** J.Burdin made a motion to amend the amendments as reviewed by staff. Seconded by F.Torr. Vote U/A

**Motion:** J.Burdin made a motion to adopt the amendments. Seconded by F.Torr. Vote U/A

## 4. NEW BUSINESS

A. Consideration and acceptance of a Conditional Use Permit for Scott & Rachel Filion, Assessor's Map 7, Lot 10, zoned R-20, and located at 17 Boston Harbor Road. (Proposal is to replace existing residential structure and detached garage with a new house, deck and attached garage, within the 100 foot Conservation District adjacent to tidal Little Bay. Temporary Conservation District impacts are 2,935 square feet and permanent Conservation District impacts are 2,053 square feet.) *(P18-15)

C.Parker explained that the applicant is seeking a Conditional Use Permit for the replacement of an existing residential structure and detached garage with a new house, deck and attached garage, within the 100 foot Conservation District adjacent to tidal Little Bay. Temporary Conservation District impacts are 2,935 square feet and permanent impacts are 2,053 square feet.

The Conservation Commission reviewed and endorsed this project on April 9, 2018.

Steve Riker, Ambit Engineering, represented both the applicant and owner. He reviewed the details of the plan and subdivision.

S.Riker clarified for G.Cruikshank that the raingarden is part of the storm water management system and an annual maintenance plan should be required,

S.Riker clarified for D.White the driveway disposition.

S.Riker clarified for D.Ciotti the make up of the reainting walls, stairs and natural ramp to the basement, and to L.Skinner that foundation drains should be in place.

S.Riker clarified for D.Landry the intent to keep as many trees on site as possible, other than where the grade needs to change for the rain garden.

**Motion:** F.Torr made a motion to accept the application. Seconded by D.White. Vote U/A

*Public hearing opened. No One Spoke Public Hearing Closed.*

**STAFF RECOMMENDATION:**
Staff finds that the request is consistent with the provisions of Chapter 170 regarding impacts to land within 100 feet of a tidal river if standards related to demonstration of need, avoidance, minimization, and mitigation are met. This proposal is consistent with those standards and staff recommends that the Planning Board approve the plan with the following conditions:

**Conditions to Be Met Prior to Signing of Plans:**

1. The applicant shall provide the Planning Department with a copy of the NHDES Wetlands Permit.
2. The applicant shall provide the Planning Department with a copy of the NHDES Shoreland Permit.
3. The applicant shall revise the plan to
    a. Note the raingarden is integral to the stormwater management and must be maintained
    b. Note the closure of the existing driveway and that the new driveway shall be no more than 22 feet wide at the throat

c. Note the material used on the earthen ramp and drainage.

4. The applicant shall provide a Stormwater Operations and Maintenance Plan.

**Motion:** L.Skinner made a motion to approve the Conditional Use Permit subject to the staff recommended conditions. Seconded by D.Landry. Vote U/A

B. Consideration and acceptance of a Minor Lot Line Adjustment for 171 Watson Road of Dover Holding Corporation, Assessor's Map E, Lot 27A & 27B, zoned ETP, and located at 398A Sixth Street, 50 & 100 Education Way. *(P18-16)

C.Parker explained that the applicant is seeking to adjust the lot lines between 2 lots. Lot 27A will decrease from 3.839 acres to 3.0 acres. Lot 27B will increase from 70.196 acres to 71.035 acres. Overall 36,527 square feet is changing hands. The change does not alter the ability to subdivide or use either lot.

The applicant is seeking a waiver from providing dimensions and bearings, as well as providing building setbacks and locations. With such a relatively small area of such a large lot being adjusted, the request is fair and reasonable.

Robert Stowell, Tritech Engineering, represented both the applicant and owner. He reviewed the details of the plan.

**Motion:** F.Torr made a motion to accept the application. Seconded by L.Skinner. Vote U/A

*Public hearing opened. No One Spoke. Public Hearing Closed.*

**STAFF RECOMMENDATION: Waiver**
Staff finds that the request is consistent with the provisions of Chapter 155, Subdivision of Land, and recommends that the Planning Board approve the waiver with the following conditions:

**Conditions to Be Met Prior to Signing of Plans:**

1. A note shall be added to the subdivision plan that waivers were granted to Section 155-18B(5) and (6) for the reasons stated by the applicant and that the Board found the criteria of 155-51A have been met.
2. The applicant shall revise the plat to add locations of existing structures for lot 27B on Plan T2, via overlaying the property lines on an aerial photograph.

**Motion:** F.Torr made a motion to approve the Waiver subject to the staff recommended conditions. Seconded by L.Skinner. Vote U/A

**STAFF RECOMMENDATION: Lot Line Adjustment Plan**
Staff finds that the request is consistent with the provisions of Chapter 155, Subdivision of Land, and recommends that the Planning Board approve the plan with the following conditions:

**Conditions to Be Met Prior to Signing of Plans:**

1. The applicant shall provide the Planning Department with a digital version of the final plat.
2. The applicant shall revise the plat to:
   a. Include the Licensed Land Surveyor signature and stamp

b. Add the owner's signatures to the final plat submitted for signature to be recorded at the Strafford County Registry of Deeds
c. Add planning file number P18-16

**Motion:** D.Landry made a motion to approve the Lot Line Adjustment Plan subject to the staff recommended conditions. Seconded by D.White. Vote U/A

C. Consideration and acceptance of a Minor Lot Line Adjustment for Richard & Anna Kay, (Owners: Richard & Anna Kay Irrevocable Trust), Assessor's Map G, Lot 29 & 29B, zoned I-2, and located at 45 Littleworth Road. *(P18-17)

C.Parker explained that the applicant is seeking to adjust the lot lines between 2 lots. Lot 29B will decrease from 14.797 acres to 2.0 acres. Lot 29 will increase from 63.372 acres to 76.169 acres. Overall 557,427 square feet or 12.8 acres, is changing hands. The change does not alter the ability to subdivide or use either lot. There currently are three barn structures in the area changing property. One will be the principle structure on the larger lot, the other two will be accessory and a shed adjacent to those will be removed. Finally, a driveway from Littleworth Road services the home plus barns. That driveway will cease to serve the barns, or an easement will need to be granted.

Robert Stowell, Tritech Engineering, represented both the applicant and owner. He reviewed the details of the plan.

**Motion:** F.Torr made a motion to accept the application. Seconded by D.Landry. Vote U/A

*Public hearing opened. No One Spoke Public Hearing Closed.*

**STAFF RECOMMENDATION:**
Staff finds that the request is consistent with the provisions of Chapter 155, Subdivision of Land, and recommends that the Planning Board approve the plan with the following conditions:

**Conditions to Be Met Prior to Signing of Plans:**

1. The applicant shall provide the Planning Department with a digital version of the final plat.
2. The applicant shall revise the plat to:
   a. Include the Licensed Land Surveyor signature and stamp
   b. Add the owner's signatures to the final plat submitted for signature to be recorded at the Strafford County Registry of Deeds
   c. Add Planning file number to be P18-17
   d. Identify which of the three barns will be the principle structure, and which are accessory structures
   e. Add a note that either the driveway will be removed five feet from both sides of the property line, and loamed and seeded, or an easement will be recorded at the Strafford County Registry of Deeds for a cross access.

**Motion:** F.Torr made a motion to approve the Lot Line Adjustment Plan subject to the staff recommended conditions. Seconded by D.White. Vote U/A

D. Update on Conservation/Preservation activities.

S.Bird and Anna Boudreau, Chair of the Open Lands Committee reviewed the activities and process used by the OLC to consider protecting lands in Dover.

D.Landry spoke in favor of continued need for protection of open space and conservation areas in Dover, as part of a three legged approach to land management.

D.Ciotti spoke in favor of reviewing all financing options to protect land, and the need to update the City Council on land preservation opportunities.

E. Discussion on Further land use changes

C.Parker reviewed the areas that staff has not developed amendments for. They include:

- Review the percentage of lot coverage in the CBD districts
- Review landscape regulations to encourage low water use
- Amend parking lot dimensions to enhance internal turning movements
- Eliminate Open Space Subdivisions

The Landscape regulations are being reviewed by Strafford Regional Planning, based upon a grant the City received and we will have amendments in May for the Board to review.

Discussion ensued about parking lot dimensions.

Discussion ensued about open space subdivisions. General consensus was to keep the regulations, but all are open to addressing issues that are raised. The Board will review regulations and an agenda item will be added to the May 22 meeting to discuss those areas raised.

## 5. STAFF COMMENTS

- Review TRC projects: 146 Dover Point Road
- Updated the Board on Washington Street, Central/Glenwood.
- Found a representative to Strafford Regional Planning, as a commissioner.
- Wished F.Torr happy birthday.
- Thanked staff for continued efforts.

## 6. MEMBER COMMENTS

D.Ciotti thanked the staff for the kudos he has received from residents about interactions with planners.

## 7. ADJOURNMENT

**Motion:** D.Ciotti made a motion to adjourn at 8:57p.m. Seconded by L.Skinner. Vote U/A

G. Landscaping

In order to separate parking areas from abutting streets, to provide areas for snow disposal, to break up expanses of vehicles and pavement, to provide summer shade on pavement areas, ~~and~~ to provide general beautification of parking facilities, and to reduce stormwater impacts, the following landscaping standards are required for non-residential development:

(1) General Requirements

(a) Existing vegetation shall be preserved wherever possible. Existing natural features of special interest, such as those having historic relevance, shall be delineated and located on the landscaping plan. A note should be added to the site plan indicating that identified feature(s) shall be protected during site clearing and construction through the use of construction fencing or other adequate protective barriers. Maximum effort should be made to preserve small stands of trees, rather than individual trees, to minimize the potential for serious damage due to wind, grade changes and soil compaction. No construction materials, equipment, vehicles, or temporary soil deposits shall be located within the dripline of existing trees. Before commencement of work, protective barriers shall be installed and maintained around each plant and/or groups of plants that are to remain on site until completion. Snow fence installed around the dripline of the tree canopy is an example of an acceptable barrier.

(b) Vegetation planted in accordance with the requirements of this section shall be non-invasive species selected for their adaptability to the climatic, geologic and topographical conditions of the site. The Planning Department shall maintain an up-to-date listing of invasive species.

(c) Shrubs and hedges shall be a minimum of 24 inches in height when measured immediately after planting. Groundcovers and perennials may be less.

(d) Effective use and preservation of natural berms, existing topography and existing vegetation is encouraged.

(e) Plants, or a combination of plants and a solid visual barrier such as wooden fencing, or berms, shall be used to screen loading, waste disposal, material storage and other areas that are likely to generate noise, dust, or other potentially disruptive conditions.

(f) Landscaping shall be used to establish and/or maintain an attractive streetscape adjacent to roadways. A minimum of one tree per 35 linear feet or portion thereof.

(g) A maintenance plan shall be provided with the site plan application. All landscaped areas shall receive regular maintenance and upkeep. Severely injured, diseased, or dead plant material shall be replaced in kind in perpetuity (avoid replacing landscape materials in the period from November to March.) Best practices to minimize environmental impacts such as the use of low phosphorous fertilizer and slow release nitrogen, shall be included in the management plan. If ownership of a site is conveyed to a new property owner the new owner shall be responsible for maintaining all landscaping in accordance with the approved final landscaping plan.

(h) Snow storage shall not be permitted on any landscape area.

~~(1)~~(2) Interior Landscaping

(a) In addition to the perimeter landscaping required in Section 149-15) C), landscaping requirements for the interior of parking lots is as follows:

| MINIMUM INTERIOR PARKING LOT LANDSCAPING REQUIREMENTS | |
|---|---|
| Number of Parking Spaces in Lot | Minimum Percent of Interior Landscaping |
| 20 or fewer spaces | Not required |
| 21 to 125 spaces | 5 percent (5%) |
| 126 to 375 spaces | 8 percent (8%) |
| Greater than 375 spaces | 10 percent (10%) |

(b) Parking lots which have more than two (2) aisles, which are approximately parallel, shall be required to have continuous landscaped planting strips separating every four (4) rows of parking. The landscaped planting strips shall be a minimum of ~~six~~ ten (~~6~~10) feet in width and shall be separated from the parking area by adequate curbing. Within the landscaped planting strips, deciduous shade trees shall be planted at forty (40) feet on center. Trees shall be species tolerant to the climatic conditions of Dover and shall be a minimum caliper of ~~two~~ three and a half (~~2~~3.5) inches (measured at four (4) feet above grade level). Within the landscaped planting strips, shrubs shall be planted between the deciduous trees at five (5) feet on center. The shrubs shall be a mix of deciduous and evergreen species, tolerant to the climatic conditions of Dover and shall be a minimum height of two (2) feet at the time of planting. All trees, shrubs and landscaping materials shall be maintained in good condition so as to present a healthy, neat, and orderly appearance.

(c) Islands at the end of a row of parking spaces are encouraged to protect parked vehicles, increase safety in parking lots, and provide space for landscaping.

The minimum size for landscaped islands shall be two hundred fifty square (250) feet in total area. Adequate curbing is required for landscaping islands.

~~(c)~~(d) Bare soil is not acceptable. The introduction of groundcovers and/or perennials planted enmasse and the use of mulch as a soil covering is acceptable. However, no more than 20 percent of the minimum landscaped area may be covered with non-living landscaping material such as bark mulch, woodchips, or leaf litter.

(2) Perimeter Landscaping

(a) Along the perimeter of parking lots with ten (10) or more spaces, deciduous shade trees shall be planted at ~~forty~~ thirty five (~~40~~35) feet on center within the buffer area required by Section 149-15 C). Trees shall be species tolerant to the climatic conditions of Dover and shall be a minimum caliper of ~~two~~ three ~~(2)~~ and a half (~~2~~3.5) inches (measured at four (4) feet above grade level). Within the perimeter buffer, shrubs shall be planted between the deciduous trees at five (5) feet on center. The shrubs shall be a mix of deciduous and evergreen species, tolerant to the climatic conditions of Dover and shall be a minimum height of two (2) feet at the time of planting. All trees, shrubs and landscaping materials shall be maintained in good condition so as to present a healthy, neat, and orderly appearance.

(i) Trees shall be salt and drought-tolerant, native or non-invasive species, and have a structure and growth form which prevents them from obstructing sidewalks and walkways.

~~(i)~~(ii) To foster biological diversity trees planted along a given street shall use the "10-20-30 Rule" (No more than 10% of the trees shall be of the same species, no more than 20% in the same genus, and no more than 30% in the same family.)

(b) ~~At the discretion of the Planning Board, alternative methods of perimeter screening may be permitted if the APPLICANT can demonstrate that an adequate screening of the parking lot is achieved. Additional screening methods that are encouraged include earthen berms planted with grass and shrubs, fencing, and low walls.~~No trees or shrubs shall obstruct the view between the street and the access drives and parking aisles near entries and exits. Plantings within 25 feet of an intersection shall not exceed a maximum mature height of 30 inches.

~~(b)~~(c) A wall, or fence of uniform appearance six (6) feet high of brick, stone or finished concrete (cannot be concrete block) may be used in conjunction with plant materials with a minimum ten (10) foot-buffer between the fence and the street. A minimum of one tree per thirty five (35) linear feet or portion thereof with a combination of shrubs, perennials, vines, and groundcovers planted en masse per thirty five (35) linear feet excluding curb cuts. A combination of both deciduous plants and evergreens are encouraged.

(3) Stormwater Management

(a) Where possible, interior landscaping islands and perimeter landscaping areas shall provide for STORM WATER treatment and bioretention as well as act as a visual buffer.

(b) To promote on-site water retention and filtration, landscaped areas shall be designed in a manner that guides stormwater from on-site impervious streets, parking areas, sidewalks and walkways to vegetated areas or approved retention areas.

(c) When irrigation systems are proposed, a temporary watering plan/ schedule, or low volume (drip) irrigation system shall be required. Permanent irrigation systems are prohibited, except as noted below. Temporary irrigation systems shall be designed and installed for efficient and effective water use to the landscaped area for a limited period of time determined by the plant material and site conditions. For those exceptions when permanent irrigation is considered necessary, such as an athletic field, permanent irrigation shall utilize water saving technologies, including rain sensors, flow meters, and management systems that monitor current weather conditions.

(d) All newly planted trees, shrubs and other vegetation shall have a watering plan during the establishment period (for trees, one-year-per-inch in caliper at planting, shrubs and other vegetation generally establish within one growing season). Mulching trees, shrubs, and plants helps retain soil moisture, moderates temperature fluctuations, provides protection from mechanical damage by mowers and trimmers, and serves as temporary covering of exposed soil until understory plants and ground covers fill in. However, thick applications of mulch (such as “volcano mulching”) will kill trees and other vegetation. Mulch shall be no greater than 3 inches in depth and shall not be in contact with the bark or stems of plants.

~~(3)~~(4) ~~Other~~ Alternate Landscaping Options

~~(a) Whenever possible, existing trees and shrubs shall be preserved and used to satisfy the minimum landscaping requirements of this section.~~ Each existing healthy and native or non-invasive tree, with a caliper of three (3) inches or greater, preserved using proper protection methods within the interior parking

lot area may be substituted for one tree required for every ten (10) parking spaces.

~~(b) Loading docks, dumpsters, generators, ground-level mechanical units and other similar devices shall be adequately screened so as not to be visible from the public road or adjacent parcels.~~ Where an applicant proposes leaving a significant portion of healthy noninvasive trees and other vegetation within the proposed construction area, the planning board will consider alternative landscaping designs.

~~(c)~~(a) ~~The use of interior landscaping islands and perimeter landscaping areas for STORM WATER treatment and bioretention is acceptable if the areas still provide a visual buffer.~~ At the discretion of the Planning Board, alternative methods of perimeter screening may be permitted if the APPLICANT can demonstrate that an adequate screening of the parking lot is achieved. Additional screening methods that are encouraged include earthen berms planted with grass and shrubs, fencing, and low walls

~~(d)~~ If the area abutting the street is existing woodland, a 25-foot woodland buffer may be left in lieu of landscaping if approved by the planning board.

~~(5) Invasive Species.~~

~~(a) While reviewing site plans, the Planning Board shall reserve the right to prohibit invasive species from being planted. The Planning Department shall maintain an up-to-date listing of invasive species.~~

CITY OF DOVER

# PLANNING BOARD - STAFF MEMO FILE #P16-31A

| | |
|---|---|
| Application Type: | Lot Line Adjustment |
| Applicant(s): | 6 Grove Street Residences, LLC & Gotham Holdings, LLC |
| Owner(s): | 6 Grove Street Residences, LLC & Gotham Holdings, LLC |
| Location: | 6 Grove Street |
| Meeting Date: | May 8, 2018 |

**INTENT:** To adjust the lot line between Map 31, Lot 14 and Lot 14D-1.

**LOTS/UNITS PROPOSED:** N/A

**AGENDA ITEM #:** 4-A

**FILE:** P16-31A

**APPLICANT(S):** 6 Grove Street Residences, LLC

**OWNER(S):** 6 Grove Street Residences, LLC & Gotham Holdings, LLC

**LOCATION:** 6 Grove Street (Assessor's Map 31, Lot 14) and Assessor's Map 31, Lot 14-D1

**ACREAGE:** Lot 14: increasing from 0.72 ac (31,775 sq. ft.) to 0.93 ac (40,821 sq. ft.)
Lot 14-D1: decreasing from 0.33 ac (14,463 sq. ft.) to 0.12 ac (6,255 sq. ft.)

**ZONING DISTRICT:** Central Business District – Transit-Oriented Sub-District (CBD-TOD)

**EXISTING LAND USE:** Commercial/vacant

**PROPOSED LAND USE:** Mixed commercial and residential, multi-family residential

**SURROUNDING LAND USE:** Multi-family residential, office/warehouse, commercial

**ZBA ACTION:** None

**ATTACHMENTS:** Application, LLA plan

**APPLICATION IS COMPLETE:** Yes

**NOTICES SENT:** Abutter notices were sent by certified mail to all abutters for this meeting.

**PERMITS REQUIRED:** None

**WAIVERS REQUESTED:** None

**Summary of Request and Background**
The applicant proposes to adjust the lot line between Map 31, Lots 14 and 14D-1. Lot 14D-12 is a vacant lot. There is no minimum lot size or frontage requirement in this zoning district.

**Consistency with Land Use Regulations**
Chapter 155-18 of the Subdivision Regulations of the City Code provides for the adjustment of existing lot lines between two or more lots. This plan is consistent with those regulations.

**STAFF RECOMMENDATION:**
The Planning Department recommends that the Planning Board accept the application for review, open the public hearing, and approve the lot line adjustment with the following conditions:

**Conditions to Be Met Prior to Signing of Plans:**

1. The applicant shall provide the Planning Department with a digital version of the final plat.
2. The applicant shall revise the plat to:
    - **a.** Add the owners' signatures to the final plat submitted for signature to be recorded at the Strafford County Registry of Deeds
    - **b.** Include location, names and widths of existing streets, including pavement widths, grades, curbs, and crosswalks
    - **c.** Include setbacks or build-to lines
    - **d.** Indicate material and size of proposed permanent monuments.

# 6 Grove Street

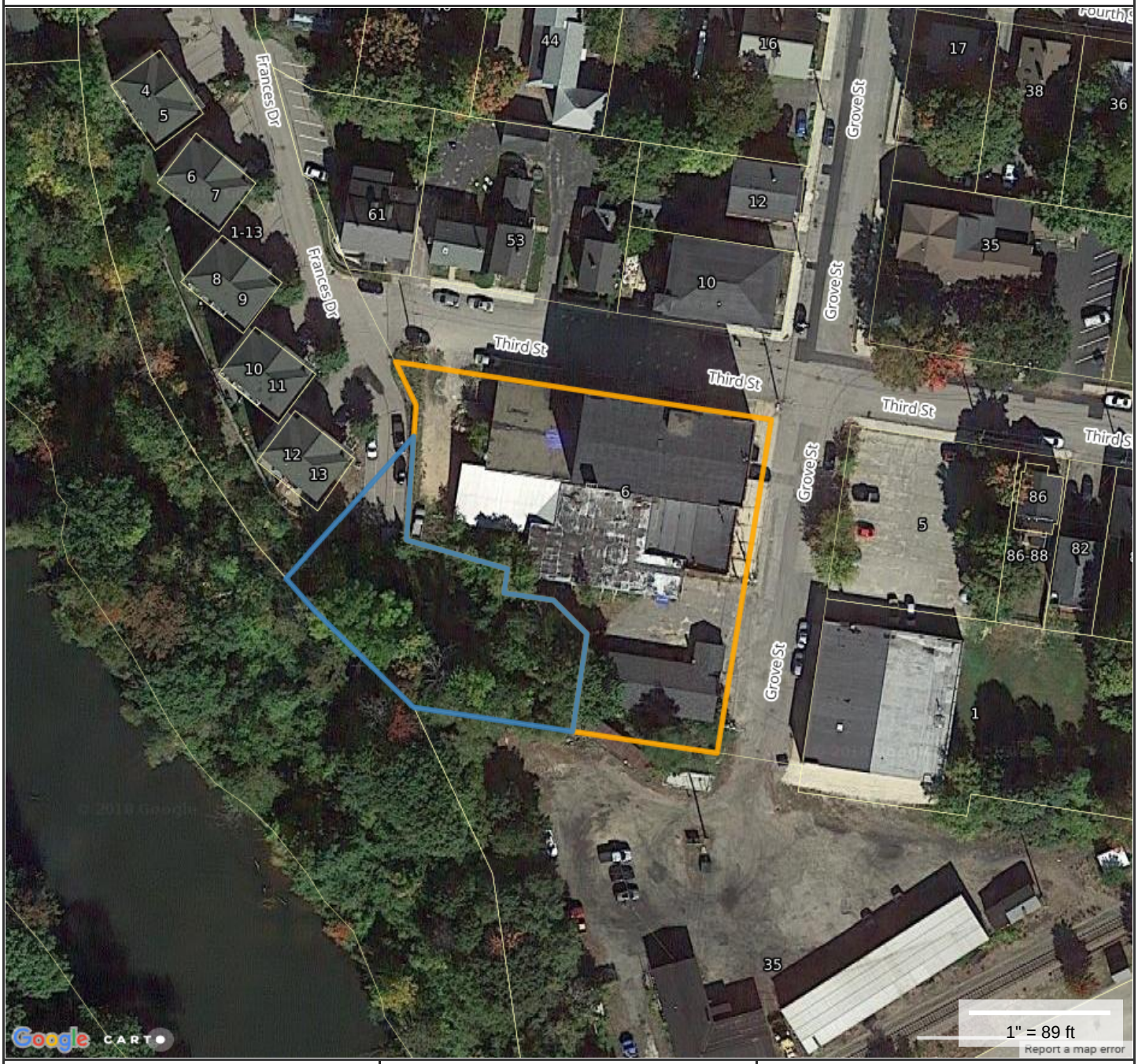


**Property Information**

| | |
|---|---|
| **Property ID** | 31004-D00001 |
| **Location** | FOURTH ST |
| **Owner** | GOTHAM HOLDINGS LLC |

MAP FOR REFERENCE ONLY
NOT A LEGAL DOCUMENT

City of Dover, NH makes no claims and no warranties, expressed or implied, concerning the validity or accuracy of the GIS data presented on this map.

Parcels updated 03/29/2018
Properties updated 04/02/2018

| CITY OF DOVER | PLANNING BOARD - STAFF MEMO FILE #P16-31B |
|---|---|
| | Application Type: Conditional Use Permit<br>Applicant(s): 6 Grove Street Residences, LLC<br>Owner(s): 6 Grove Street Residences, LLC<br>Location: 6 Grove Street<br>Meeting Date: April 10, 2018 |

**INTENT:** To obtain Conditional Use Permits to allow two-story townhouse structures, where a minimum of three stories is required, and to provide less than the minimum 75% lot coverage.

**LOTS/UNITS PROPOSED:** Approximately 10,000 sq. ft. of commercial space, 32 apartments, and 6 townhouse units

**AGENDA ITEM #:** 4-B

**FILE:** P16-31B

**APPLICANT(S):** 6 Grove Street Residences, LLC

**OWNER(S):** 6 Grove Street Residences, LLC

**LOCATION:** 6 Grove Street (Assessor's Map 31, Lot 14)

**ACREAGE:** 0.93 ac (40,821 sq. ft.)

**ZONING DISTRICT:** Central Business District – Transit-Oriented Sub-District (CBD-TOD)

**EXISTING LAND USE:** Commercial/vacant

**PROPOSED LAND USE:** Mixed commercial and residential, multi-family residential

**SURROUNDING LAND USE:** Multi-family residential, office/warehouse, commercial

**ZBA ACTION:** None

**ATTACHMENTS:** Application

**APPLICATION IS COMPLETE:** Yes

**NOTICES SENT:** Abutter notices were sent by certified mail to all abutters for this meeting.

**PERMITS REQUIRED:**
- NHDES Shoreland Permit

**WAIVERS REQUESTED:**
- **149-14.G(1)** Interior Landscaping

**Summary of Request and Background**
The applicant is requesting two Conditional Use Permits. One would permit the six townhouse units in two structures of two stories each, where a minimum of three stories is required in the TOD sub-district. The second would permit a lot coverage of 35.58%, where the minimum lot coverage of the TOD sub-district is 75%. The existing lot coverage is 39%.

A Conditional Use Permit was previously granted to permit 47% lot coverage.

**Consistency with Land Use Regulations**
The CBD-TOD Sub-district requires a minimum lot coverage of 75%. Because the applicant proposes buildings which do not meet those requirements, a Conditional Use Permit is required. If this property were in any other zone, a variance would be required; however, in the CBD relief is provided by the Planning Board via a CUP rather than by a Zoning Board variance.

Chapter 170-20-B(1) of the City Code states that conditional use approval for relief from the standards may be granted by the Planning Board provided that the proposed project complies with the following standards:

(a) That both public and private BUILDINGs and landscaping shall contribute to the physical definition of RIGHTs OF WAY as CIVIC SPACEs.
(b) That development shall adequately accommodate automobiles, while respecting the pedestrian and the spatial form of public areas.
(c) That the design of STREETs and BUILDINGs shall reinforce safe environments, but not at the expense of accessibility.
(d) That architecture and landscape design shall grow from local climate, topography, history, and BUILDING practice.
(e) That BUILDINGs shall provide their inhabitants with a clear sense of geography and climate through energy efficient methods.
(f) That CIVIC BUILDINGs and public gathering places shall be provided as locations that reinforce community identity and activity.
(g) That CIVIC BUILDINGs shall be distinctive and appropriate to a role more important than the other BUILDINGs that constitute the fabric of the city.
(h) That the preservation and renewal of historic BUILDINGs shall be facilitated.
(i) That the harmonious and orderly evolution of urban areas shall be advanced by the proposed BUILDING and/or use.

| CITY OF DOVER | PLANNING BOARD - STAFF MEMO FILE #P16-31B |
|---|---|
| | Application Type: Conditional Use Permit<br>Applicant(s): 6 Grove Street Residences, LLC<br>Owner(s): 6 Grove Street Residences, LLC<br>Location: 6 Grove Street<br>Meeting Date: April 10, 2018 |

Considering the justification provided in the applicant's letter dated February 19, 2018, the Conditional Use Permit request meets these requirements.

The applicant appeared before the Technical Review Committee on February 8, 2018 (minutes were previously provided). Staff, the applicant, and abutters have also met on site to address abutter concerns.

**STAFF RECOMMENDATION:**
The Planning Department recommends that the Planning Board accept the application for review, open the public hearing, and approve the Conditional Use Permit with the following conditions:

**Conditions to Be Met Prior to Conditional Use Permit:**

1. Site plan (P16-31C) shall be approved.
2. The applicant shall be subject to a formal agreement between the Planning Board and the applicant. Said agreement shall be recorded at the Strafford County Registry of Deeds per Chapter 170-20.B(3).

| CITY OF DOVER | PLANNING BOARD - STAFF MEMO FILE #P16-31C |
|---|---|
| | Application Type: Site Plan Amendment for Review<br>Applicant(s): 6 Grove Street Residences, LLC<br>Owner(s): 6 Grove Street Residences, LLC<br>Location: 6 Grove Street<br>Meeting Date: May 8, 2018 |

**INTENT:** To amend a site plan by adding six townhouse units in two buildings, for a total of 38 units, where the previously approved plan included 36 units and a fifth story addition to the existing building.

**LOTS/UNITS PROPOSED:** Approximately 10,000 sq. ft. of commercial space, 32 apartments, and 6 townhouse units

**AGENDA ITEM #:** 4-C

**FILE:** P16-31C

**APPLICANT(S):** 6 Grove Street Residences, LLC

**OWNER(S):** 6 Grove Street Residences, LLC

**LOCATION:** 6 Grove Street (Assessor's Map 31, Lot 14)

**ACREAGE:** 0.93 ac (40,821 sq. ft.)

**ZONING DISTRICT:** Central Business District – Transit-Oriented Sub-District (CBD-TOD)

**EXISTING LAND USE:** Commercial/vacant

**PROPOSED LAND USE:** Mixed commercial and residential, multi-family residential

**SURROUNDING LAND USE:** Multi-family residential, office/warehouse, commercial

**ZBA ACTION:** None

**ATTACHMENTS:** Application, Site Plan

**APPLICATION IS COMPLETE:** Yes

**NOTICES SENT:** Abutter notices were sent by certified mail to all abutters for this meeting.

**PERMITS REQUIRED:**
NHDES Shoreland Permit

**WAIVERS REQUESTED:**
**149-14.G(1)** Interior Landscaping

**Summary of Request and Background**
The applicant proposes amending a previously approved site plan. The previous approval was for a 9,060 s.f. mixed-use building with commercial space on the first floor and 36 residential units on the second through fifth floors. The amended site plan eliminates the addition of a fifth floor, includes 8,967 square feet of commercial space and 32 residential units on the second through fourth floors, as well as six townhouse units in two, two-story buildings at the rear of the site.

The applicant appeared before the Technical Review Committee on February 8, 2018.

Planning Staff has reviewed the parking and find the number provided is acceptable.

**Consistency with Land Use Regulations**
Chapter 149-4 of the Site Review Regulations of the City Code provides for site review by the Planning Board of new construction of various types.

**STAFF RECOMMENDATION:**
The Planning Department recommends that the Planning Board accept the application for review, open the public hearing, and approve the site plan with the following conditions:

**Waiver Request:**
The Planning Department recommends that the Board approve the waiver from Section 149-14.G(1) for interior landscaping requirements. Instead of additional landscaping islands, the applicant increased landscaping in areas identified by the TRC.

**Conditions to Be Met Prior to Signing of Plans:**

1. Lot Line Adjustments (P16-31A and P16-31D) and Conditional Use Permits (P16-31B) shall be approved.
2. The applicant shall provide:
    a. letters from utilities regarding ability to provide service to the development
    b. add detail for 8' white vinyl fence proposed on west side of property
    c. a digital version of final plan set.
3. The applicant must revise plan set to:
    a. Reflect proposed lot line adjustment P16-31D, between Map 31, Lot 4-D1 and Map 31, Lot 4-D, if approved.
    b. Add a note to the plan acknowledging that it supersedes approved plan P16-31
    c. Add the owners' signatures to the final plan

**Conditions to Be Met Prior to Issuance of a Building Permit:**

4. The new building shall be assessed the current water/sewer investment fees in place at the time of application for water/sewer service.

**Conditions to Be Met Prior to Issuance of a Certificate of Occupancy:**

5. New buildings shall be assessed the current impact fees in place at the time of building permit application and fees shall be paid prior to issuance of Certificate(s) of Occupancy.
6. The applicant shall provide a letter of credit or other form of security acceptable to the City for any unfinished work.

# MIXED USE SITE PLAN
# FOR
# 6 GROVE STREET RESIDENCES, LLC
# 6 GROVE STREET
# DOVER, N.H.
# TAX MAP 31, LOT 14

***TABLE OF CONTENTS:***


SHEET 1 ~ NEIGHBORHOOD PLAN
SHEET 2 ~ EXISTING CONDITIONS PLAN
SHEET 3 ~ DEMOLITION PLAN AND PAVEMENT EXTENTS PLAN
SHEET 4 ~ SITE PLAN
SHEET 5 ~ GRADING PLAN
SHEET 6 ~ DRAINAGE PLAN
SHEET 7 ~ P-101 SAND FILTER DETAILS
SHEET 8 ~ EROSION & SEDIMENT CONTROL PLAN
SHEET 9 ~ UTILITY PLAN
SHEET 10 ~ UTILITY PLAN & PROFILE
SHEET 11 ~ LANDSCAPING PLAN
SHEET 12 ~ LIGHTING PLAN
SHEET 13 ~ E101-SEDIMENT & EROSION DETAILS
SHEET 14 ~ E102-SEDIMENT & EROSION DETAILS
SHEET 15 ~ D101 DRAINAGE DETAILS
SHEET 16 ~ C101-CONSTRUCTION DETAILS
SHEET 17 ~ C102-CONSTRUCTION DETAILS
SHEET 18 ~ C103-CONSTRUCTION DETAILS
SHEET 19 ~ L101-LANDSCAPING DETAILS
SHEET 20 ~ U101-UTILITY DETAILS
SHEET 21 ~ U102-UTILITY DETAILS


NOTE:

BERRY SURVEYING & ENGINEERING HAS PREPARED AN INSPECTION & MAINTENANCE MANUAL AS PART OF THIS PROJECTS DOCUMENTATION. ALL USERS ARE BOUND TO THIS DOCUMENT AS PART OF THE APPROVAL OF THE PLANNING BOARD. COPIES OF THE YEARLY INSPECTIONS ARE TO BE DELIVERED TO THE CITY OF DOVER COMMUNITY SERVICES DEPARTMENT.


OWNER: 6 GROVE STREET RESIDENCES, LLC
35 THIRD STREET
DOVER, NH 03820

APPLICANT: 6 GROVE STREET RESIDENCES, LLC
35 THIRD STREET
DOVER, NH 03820

SURVEYOR OF RECORD: KENNETH A. BERRY, PE, LLS
CPESC, CESSWI, CPSWQ
BERRY SURVEYING & ENGINEERING
335 SECOND CROWN POINT ROAD
BARRINGTON, NH 03825
(603) 332-2863

ENGINEER OF RECORD: KENNETH A. BERRY, PE, LLS
CPESC, CESSWI, CPSWQ
BERRY SURVEYING & ENGINEERING
335 SECOND CROWN POINT ROAD
BARRINGTON, NH 03825
(603) 332-2863

WETLAND SCIENTIST: STONEY RIDGE ENVIRONMENTAL
CYNTHIA M. BALCIUS, CSS, CWS, CPESC
229 PARKER MOUNTAIN ROAD
ALTON, NH 03809
603-776-5825


LOCATION PLAN
DOVER, NH
NOT TO SCALE

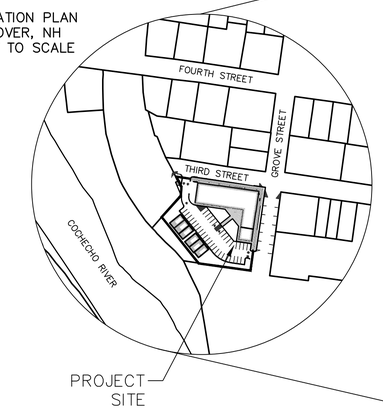


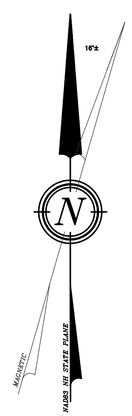


*VICINITY SKETCH*
DOVER, N.H.
SCALE: 1" = 500'±

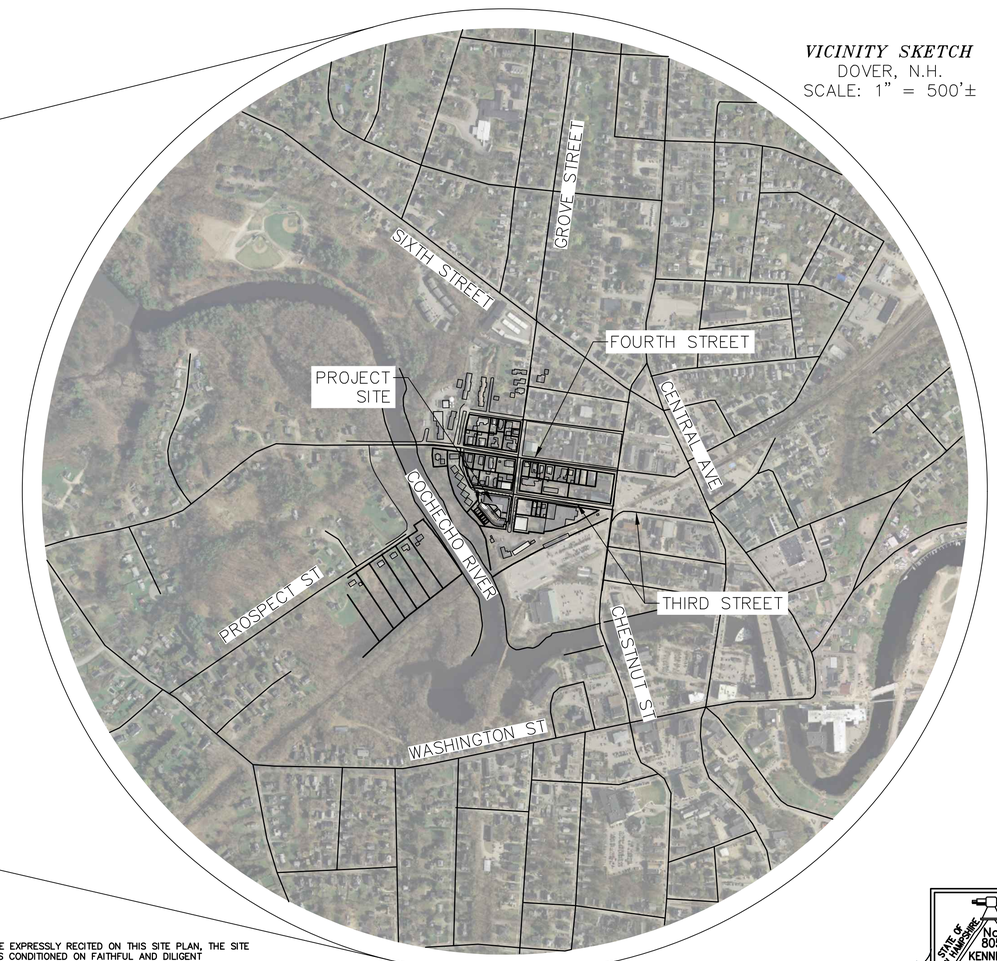


***REQUIRED PERMITS:***

1.) NHDES SHORELAND IMPACT PERMIT.
2.) SEWER DISCHARGE PERMIT.

***GENERAL PLAN SET NOTES:***

1.) 11x17" PLANS ARE HALF THE PUBLISHED SCALE.

2.) ALL PLANS ARE CONSIDERED TO BE NOT FOR CONSTRUCTION UNLESS THEY CONTAIN THE APPROVAL STAMP OF THE CITY OF DOVER.

WHETHER OR NOT OTHERWISE EXPRESSLY RECITED ON THIS SITE PLAN, THE SITE PLAN APPROVAL GRANTED IS CONDITIONED ON FAITHFUL AND DILIGENT ADHERENCE BY THE OWNER/SUBDIVIDER/DEVELOPER OF ALL TERMS, CONDITIONS, PROVISIONS AND SPECIFICATIONS OF THE CITY OF DOVER LAND SITE PLAN REGULATIONS AS AMENDED OR AS MAY LATER BE AMENDED, IN EFFECT ON THE DATE OF APPROVAL, UNLESS OR EXCEPT INSOFAR AS EXPRESSLY WAIVED, IN ANY PARTICULAR, BELOW. NON - ADHERENCE MAY RESULT IN A REVOCATION OF APPROVAL. ANY VARIATION FROM THE APPROVED PLAN WILL REQUIRE A RESUBMISSION FOR SITE PLAN APPROVAL.

STATE OF NEW HAMPSHIRE
No. 805
KENNETH A. BERRY
LICENSED LAND SURVEYOR
SIGNATURE

DOVER PLANNING #16-31C

| REVISION | DATE | DESCRIPTION |
|---|---|---|
| #3 | 4-27-18 | REVISE PER ABUTTER COMMENT |
| #2 | 3-27-18 | REVISED PER ZONING CHANGE |
| #1 | 2-19-18 | REVISED PER TRC COMMENTS |

SITE PLAN
FOR
6 GROVE STREET RESIDENCES, LLC
FOR PROPERTY LOCATED AT
6 GROVE STREET, DOVER NH
***TAX MAP 31 LOT 14***


BERRY SURVEYING & ENGINEERING
335 SECOND CROWN POINT ROAD
BARRINGTON, NH 03825 (603)332-2863


SCALE : AS SHOWN
DATE : JANUARY 18, 2018
FILE NO. : DB 2016 - 090

STATE OF NEW HAMPSHIRE
KENNETH A. BERRY
No. 14243
LICENSED
PROFESSIONAL ENGINEER

***EXISTING LEGEND:***

- IRON BOUND ~TBS~
- IRON BOUND ~FND~
- GRANITE BOUND ~FND~
- STONE BOUND ~FND~
- UTILITY POLE
- GUY WIRE
- CURB STOP
- GATE VALVE
- GAS VALVE
- FIRE HYDRANT
- CATCH BASIN
- SEWER MANHOLE
- SINGLE POST SIGN
- TEST PIT
- TREE
- BUILDING SETBACK LINE
- EASEMENT LINE
- GAS LINE
- WATER LINE
- SEWER LINE
- OVERHEAD UTILITIES
- HIGHWAY FENCE
- SOILS LINE
- EXISTING CONTOUR MINOR
- EXISTING CONTOUR MAJOR
- EXISTING CULVERT PIPE
- FLOOD ZONE
- 100' CONSERVATION DISTRICT
- 50' PRIMARY BUILDING SETBACK
- 150' NATURAL WOODLAND BUFFER
- 250' SHORELAND PROTECTION

***PROPOSED LEGEND:***

- UTILITY POLE
- UTILITY PADS
- SEWER MANHOLE
- WATER SHUT OFF / VALVE
- HYDRANT
- THRUST BLOCK
- LIGHTING
- CATCH BASIN / DRAIN MANHOLE
- SIGNAGE
- LAMP
- CONTOUR MINOR
- CONTOUR MAJOR
- SPOT GRADE
- CULVERT W/ FLARED END SECTION (F.E.S.)
- DETAIL SHEET / DETAIL
- TREE LINE
- CENTER LINE
- UNDERGROUND UTILITY TRANSFORMER / J.BOX
- UNDER DRAIN
- WATER LINE
- SEWER LINE
- GAS LINE
- SILT FENCE / EROSION MIX BERM
- FILTREXX SILT SOXX (8" or 12" AS NOTED)
- ORANGE CONSTRUCTION PERIMETER FENCE

***ABBREVIATION LEGEND:***

| | |
|---|---|
| S.G.C. | SLOPED GRANITE CURB |
| V.G.C. | VERTICAL GRANITE CURB |
| E.O.P. | EDGE OF PAVEMENT |
| B.C.C. | BITUMINOUS CONCRETE CURB |
| BITUM. | BITUMINOUS |
| E.O.P. | EDGE OF PAVEMENT |
| E.S.H.W.T | ESTIMATE SEASONAL HIGH WATER TABLE |
| TYP. | TYPICAL |
| T. BLOCK | THRUST BLOCK |
| CONC. | CONCRETE |
| U.G.E. | UNDER GROUND ELECTRIC / UTILITY |
| U.D. | UNDER DRAIN |
| HDPE | HIGH DENSITY POLYETHYLENE |
| RCP | REINFORCED CONCRETE PIPE |
| F.G. | FINISHED GRADE |
| E.G. | EXISTING GRADE |
| T.W. | TRAVELED WAY |
| T.B.R. | TO BE REMOVED |
| '/, | FEET / FEET |

- { } SSL ( ) ~ {SIZE} SINGLE SOLID LINE (COLOR W=WHITE, Y=YELLOW)
- { } DSL ( ) ~ {SIZE} DOUBLE SOLID LINE (COLOR W=WHITE, Y=YELLOW)
- { } SSB ( ) ~ {SIZE} SINGLE SOLID W/ BROKEN LINE (COLOR W=WHITE, Y=YELLOW)
- { } SBL ( ) ~ {SIZE} SINGLE BROKEN LINE (COLOR W=WHITE, Y=YELLOW)
- { } DBL ( ) ~ {SIZE} DOUBLE BROKEN LINE (COLOR W=WHITE, Y=YELLOW)

| SIGN ID NUMBER | SIGN SIZE (WIDTH x HEIGHT) | SIGN | TEXT DIMENSIONS | NO. OF SIGNS | BACKGROUND | LEGEND | BORDER | POST SIZE & QUANTITY |
|---|---|---|---|---|---|---|---|---|
| R1-1 | 30"x30" | STOP | SEE STANDARD HIGHWAY SIGNS 2004 EDITION PUBLISHED BY USDOT - FHWA | 4 | RED | WHITE | WHITE | SQUARE (4) |
| R7-8 | 12"x18" | RESERVED PARKING | SEE STANDARD HIGHWAY SIGNS 2004 EDITION PUBLISHED BY USDOT - FHWA | 2 | WHITE | GREEN W/ WHITE SYMBOL ON BLUE | RED | SQUARE (2) |
| R7-8a | 12"x6" | VAN ACCESSIBLE | SEE STANDARD HIGHWAY SIGNS 2004 EDITION PUBLISHED BY USDOT - FHWA | 1 | WHITE | GREEN | GREEN | SQUARE (1) |
| R5-1 | 30"x30" | DO NOT ENTER | SEE STANDARD HIGHWAY SIGNS 2004 EDITION PUBLISHED BY USDOT - FHWA | 2 | WHITE W/ RED SYMBOL | WHITE | WHITE | SQUARE (2) |
| R6-1L | 36"x12" | ONE WAY | SEE STANDARD HIGHWAY SIGNS 2004 EDITION PUBLISHED BY USDOT - FHWA | 1 | BLACK W/ WHITE ARROW | BLACK | WHITE | SQUARE (2) |
| R8-31 | 12"x18" | NO PARKING FIRE LANE | SEE STANDARD HIGHWAY SIGNS 2004 EDITION PUBLISHED BY USDOT - FHWA | 1 | WHITE | RED | RED | SQUARE (1) |
| R3-5R | 30"x36" | ONLY | SEE STANDARD HIGHWAY SIGNS 2004 EDITION PUBLISHED BY USDOT - FHWA | 1 | WHITE | BLACK | BLACK | SQUARE (1) |

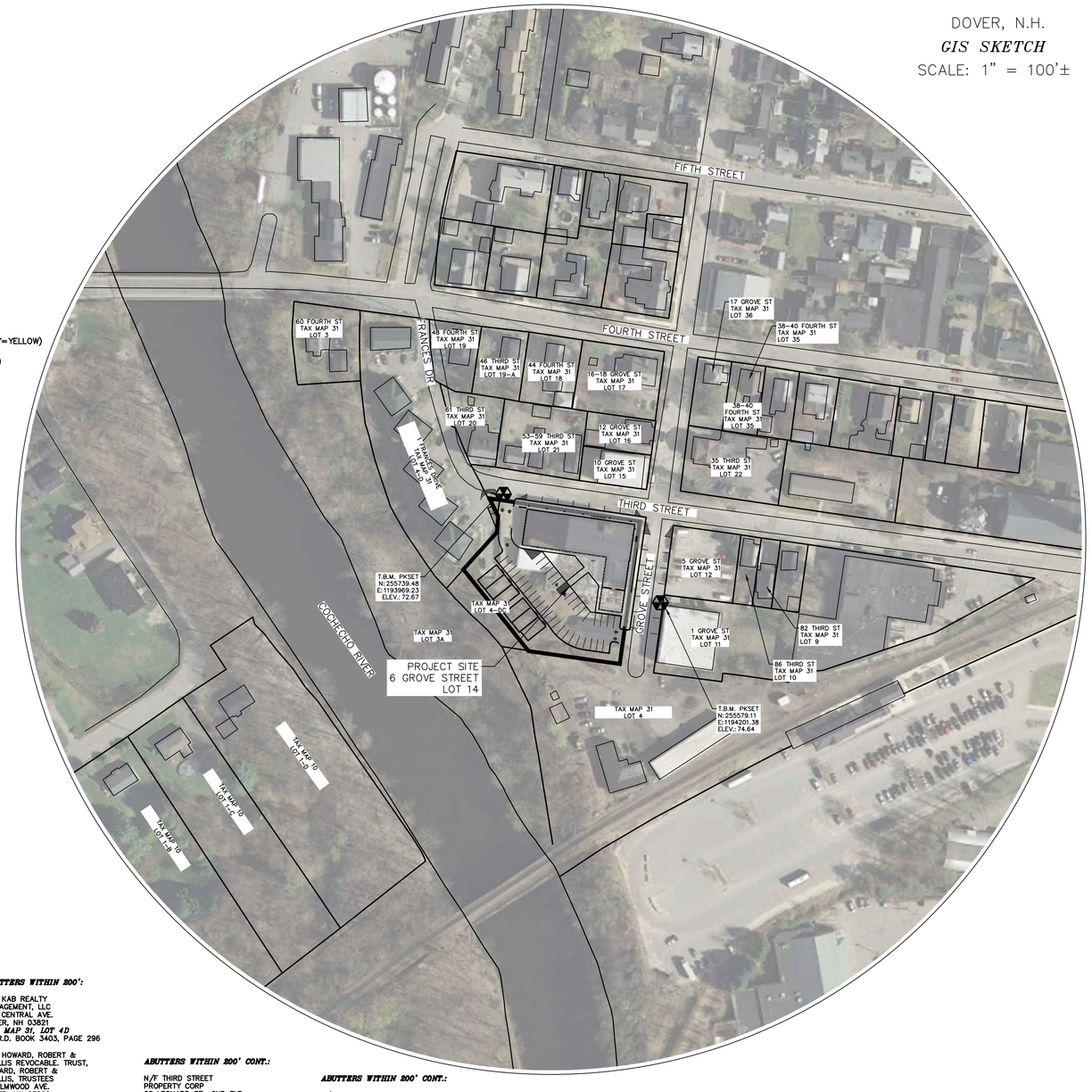


***ABUTTERS WITHIN 200':***

N/F KAB REALTY MANAGEMENT, LLC
686 CENTRAL AVE.
DOVER, NH 03821
***TAX MAP 31, LOT 4D***
S.C.R.D. BOOK 3403, PAGE 296

N/F HOWARD, ROBERT & PHYLLIS REVOCABLE. TRUST, HOWARD, ROBERT & PHYLLIS, TRUSTEES
18 ELMWOOD AVE.
DOVER, NH 03820
***TAX MAP 31, LOT 20***
S.C.R.D. BOOK 3288, PAGE 441

N/F THIRD STREET TERRACE CONDOMINIUMS, 53 THIRD STREET, LLC
277 MAIN STREET
DURHAM, NH 03824
***TAX MAP 31, LOT 21***
S.C.R.D. BOOK 3446, PAGE 119

N/F 10 GROVE STREET, LLC
10 GROVE STREET, UNIT A
DOVER, NH 03820
***TAX MAP 31, LOT 15***
S.C.R.D. BOOK 4388, PAGE 911

N/F ABK REALTY MANAGEMENT, LLC
35 THIRD STREET
DOVER, NH 03820-3316
***TAX MAP 31, LOT 22***
S.C.R.D. BOOK, 3689, PAGE 49

***ABUTTERS WITHIN 200' CONT.:***

N/F THIRD STREET PROPERTY CORP
68 LEONARD ST., 2ND FLR
BELMONT, MA 02178
TAX MAP 31, LOT 12
S.C.R.D. BOOK 1897, PAGE 715

N/F ONE GROVE STREET, LLC
P.O. BOX 516
DOVER, NH 03821-0516
***TAX MAP 31, LOT 11***
S.C.R.D. BOOK 3684, PAGE 740

N/F SPRINT COMMUNICATIONS CO.
C/O PROP TAX DEPT.
P.O. BOX 12913
SHAWNEE MISSION, KS 66282-2913
***TAX MAP 31, LOT 4LSE***
S.C.R.D. BOOK 1703, PAGE 537

N/F EBERT, JOSEPH ARTHUR & MARINA A.
3 FRANCES DRIVE
DOVER, NH 03820
TAX MAP 31, LOT 4DC
S.C.R.D. BOOK 3496, PAGE 707

***ABUTTERS WITHIN 200' CONT.:***

N/F ERNEST 39 HOLDING, LLC
26 TIDEWATER FARM ROAD
DOVER, NH 03821
***TAX MAP 31, LOT 10-1***
S.C.R.D. BOOK 4055, PAGE 992

N/F GRASS, ARTHUR
82 THIRD STREET
DOVER, NH 03820
***TAX MAP 31, LOT 9***
S.C.R.D. BOOK 1271, PAGE 604

N/F RIELLY, BERNARD R.
38 FOURTH ST
DOVER, NH 03820
***TAX MAP 31, LOT 35***
S.C.R.D. BOOK 1893, PAGE 13

N/F MIZENER, MICHAEL W.
17 GROVE STREET
DOVER, NH 03820
***TAX MAP 31, LOT 36***
S.C.R.D. BOOK 4271, PAGE 18

***ABUTTERS WITHIN 200' CONT.:***

N/F EMERY, THOMAS H.
2726 SHELTER ISLAND #279
SAN DIEGO, CA 92106
***TAX MAP 31, LOT 17***
S.C.R.D. BOOK 3190, PAGE 451

N/F BOHAN, RICHARD P. & K. KATHERINE TRUSTEES
R & K BOHAN FAMILY REV. TRUST
125 PERKINS ROAD
MADBURY, NH 03823
***TAX MAP 31, LOT 18***
S.C.R.D. BOOK 4078, PAGE 103

N/F BUNGERT, ADAM E.
46 FOURTH STREET
DOVER, NH 03820
***TAX MAP 31, LOT 19A***
S.C.R.D. BOOK 4028, PAGE 155

***ABUTTERS WITHIN 200' CONT.:***

N/F DECEW, JUDSON & HUSSEY, SEAN
P.O. BOX 178
DOVER, NH 03821
***TAX MAP 31, LOT 16***
S.C.R.D. BOOK 3028, PAGE 781

N/F BENKOSKY, MATTHEW
459 PACKERS FALLS ROAD
LEE, NH 03861
TAX MAP 31, LOT 19
S.C.R.D. BOOK 4412, PAGE 962

N/F CITY OF DOVER
288 CENTRAL AVE.
DOVER, NH 03820-4169
TAX MAP 31, LOT 3A
S.C.R.D. BOOK 1714, PAGE 396

16°±

MAGNETIC

NAD83 NH STATE PLANE

DOVER PLANNING #16-31C

| REVISION | DATE | DESCRIPTION |
|---|---|---|
| #3 | 4-27-18 | REVISE PER ABUTTER COMMENT |
| #2 | 3-27-18 | REVISED PER ZONING CHANGE |
| #1 | 2-19-18 | REVISED PER TRC COMMENTS |

NEIGHBORHOOD PLAN
FOR
6 GROVE STREET RESIDENCES, LLC
FOR PROPERTY LOCATED AT
6 GROVE STREET, DOVER NH
***TAX MAP 31 LOT 14***

BERRY SURVEYING & ENGINEERING
335 SECOND CROWN POINT ROAD
BARRINGTON, NH 03825 (603)332-2863

SCALE : AS SHOWN
DATE : JANUARY 18, 2018
FILE NO. : DB 2016 - 090

STATE OF NEW HAMPSHIRE NO. 805 KENNETH A. BERRY LICENSED LAND SURVEYOR
SIGNATURE

SHEET 1 OF 21

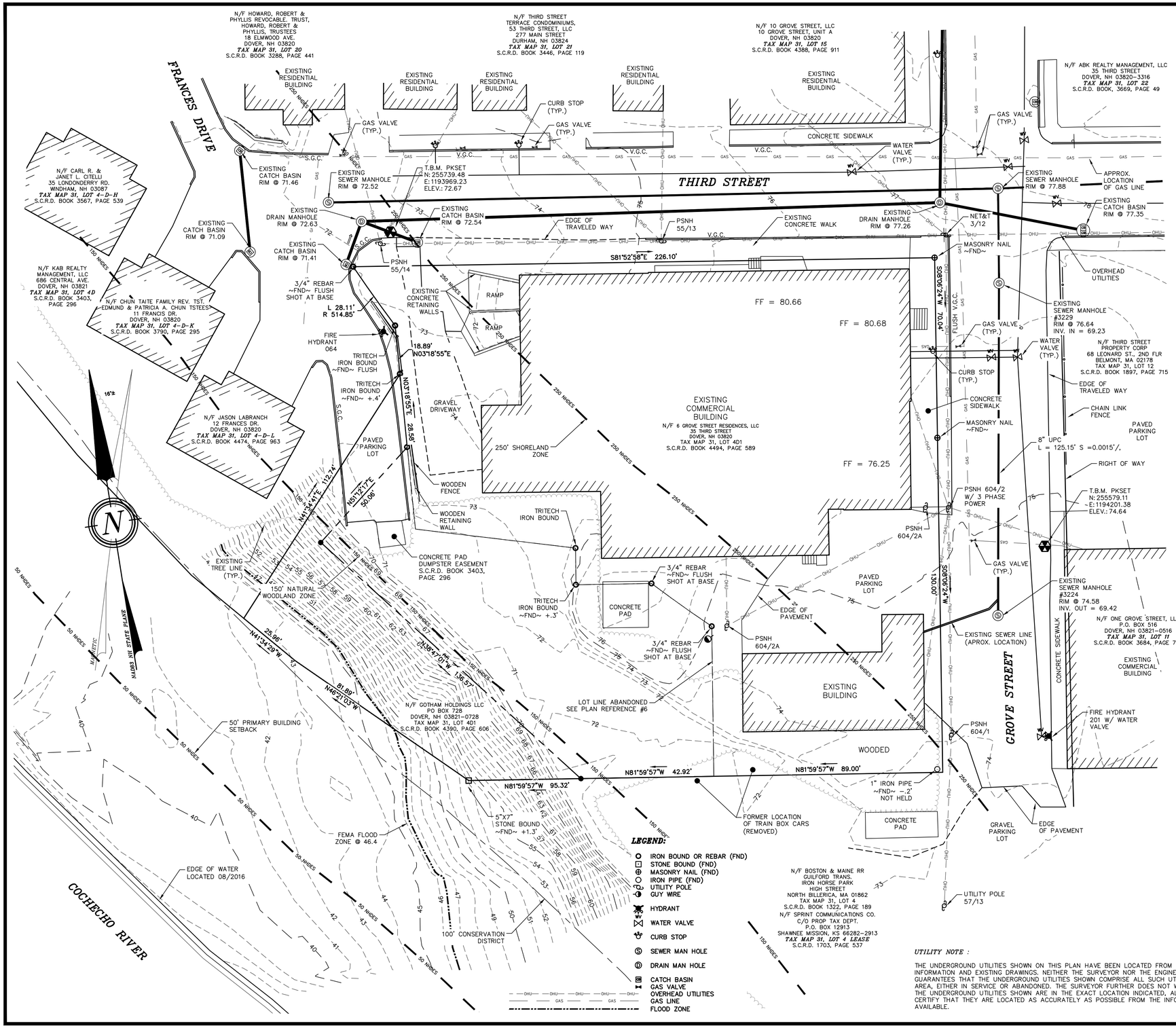


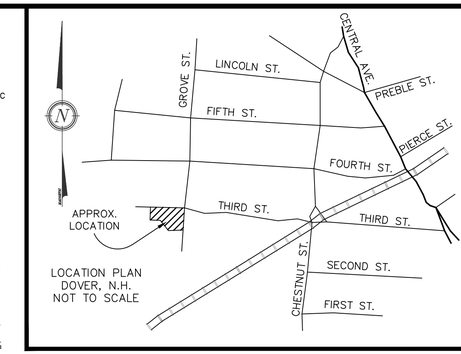


**NOTES:**

1.) OWNER: 6 GROVE STREET RESIDENCES, LLC
35 THIRD STREET
DOVER, NH 03820

2.) TAX MAP 31, LOT 14

3.) LOT AREA: 40,821 Sq. Ft., 0.93 Ac.

4.) S.C.R.D. BOOK 4495, PAGE 589

5.) ZONING NOTES: CBD CENTRAL BUSINESS DISTRICT ZONE, TRANSIT ORIENTED DEVELOPMENT SUB-DISTRICT

| | |
|---|---|
| MINIMUM LOT SIZE: | N/A |
| MINIMUM FRONTAGE: | N/A |
| BUILDING SETBACK REQUIREMENTS: | |
| FRONT (EXISTING) : | 0 FEET |
| SIDE : | 10 FT MIN, 25 FT MAX |
| REAR : | 0 FT MIN, 25 FT MAX |
| MAXIMUM LOT COVERAGE: | 75 – 100 PERCENT |
| MAXIMUM BUILDING HEIGHT: | 3 STORY MIN, 5 STORY MAX |

6.) I HEREBY CERTIFY THAT, TO THE BEST OF MY KNOWLEDGE & BELIEF, THIS PARCEL DOES NOT FALL WITHIN THE FLOOD PLAIN FLOOD HAZARD REF.: FEMA COMMUNITY# –330145, MAP# – 33017C0310E, DATED: SEPTEMBER 30, 2015

7.) VERTICAL DATUM BASED ON NAVD88 ELEVATIONS. HORIZONTAL COORDINATES BASED ON NAD83. COORDINATES GATHERED USING TOPCON HIPER SR SURVEY GRADE GPS RECEIVERS.

8.) THE BOUNDARY LINES SHOWN ON THIS PLAN ARE THE RESULT OF A CLOSED TRAVERSE PERFORMED BY THIS OFFICE IN AUGUST OF 2016, WITH AN ERROR OF CLOSURE OF 1 PART IN 125,521.

9.) THE INTENT OF THIS PLAN IS TO SHOW THE EXISTING CONDITIONS ON TAX MAP 31, LOT 14 AS OF THE DATE OF THIS FIELD SURVEY & UPDATED NOVEMBER 2017.

10.) EXISTING IMPERVIOUS AREA ON LOT = 26,613 Sq.Ft. (65.19% OF LOT)

11.) EXISTING IMPERVIOUS AREA ON LOT WITHIN 250' OF SHORELAND ZONE = 7,665 Sq.Ft. (34.71% OF LOT WITHIN SHORELAND ZONE)

12.) NO WETLANDS ARE PRESENT ON THE EXISTING LOT AS DETERMINED BY STONEY RIDGE ENVIRONMENTAL.

**PLAN REFERENCE:**

1.) "LOT LINE REVISION PLAN LAND OF BOSTON & MAINE CORPORATION TO ANTHONY CONSENTINO REV. TRUST, GROVE STREET, DOVER N.H. TAX MAP 31, LOT 4 & 11" BY: BERRY SURVEYING & ENGINEERING – DATED: JULY 28, 2008 S.C.R.D. PLAN #95–88

2.) "SUBDIVISION PLAN AND BOUNDARY LINE ADJUSTMENT PLAN, SUMMIT LAND DEVELOPMENT, ALAN & SHERRILYN HATCH, VALERIE L. HARVEY AND ROBERT & PHYLLIS HOWARD, THIRD STREET, FOURTH STREET AND GROVE STREET, DOVER, NEW HAMPSHIRE" BY: TRITECH ENGINEERING CORPORATION – DATED: MAY 8, 2006 S.C.R.D. PLAN #86–61

3.) "SUBDIVISION PLAN AND BOUNDARY LINE ADJUSTMENT PLAN, SUMMIT LAND DEVELOPMENT, ALAN & SHERRILYN HATCH, VALERIE L. HARVEY AND ROBERT & PHYLLIS HOWARD, THIRD STREET, FOURTH STREET AND GROVE STREET, DOVER, NEW HAMPSHIRE" BY: TRITECH ENGINEERING CORPORATION – DATED: MAY 8, 2006 S.C.R.D. PLAN #86–62

4.) "LOT LINE RELOCATION PLAN FOR BOSTON & MAINE CORPORATION TO FIRST NATIONAL BANK OF PORTSMOUTH, THIRD & GROVE STREET, COUNTY OF STRAFFORD, DOVER, N.H. BY: RICHARD P. MILLETTE AND ASSOCIATES – DATED: NOVEMBER 5, 1993 S.C.R.D. PLAN #44–12

5.) "RIGHT–OF–WAY AND TRACK MAP BOSTON AND MAINE R.R. OPERATED BY THE BOSTON AND MAINE R.R., STATION 0+0 TO STATION 52+80" VAL SECTION 2, MAP 55–1

6.) "LOT LINE REVISION FOR 6 GROVE STREET RESIDENCES, LLC FOR PROPERTY LOCATED AT 6 GROVE STREET, DOVER NH TAX MAP 31 LOT 14" BY: BERRY SURVEYING & ENGINEERING – DATED: NOVEBER 21, 2017 BS&E FILE NUMBER DB 2016–090 / DOVER PLANNING # 16–031A

*UTILITY NOTE :*

THE UNDERGROUND UTILITIES SHOWN ON THIS PLAN HAVE BEEN LOCATED FROM FIELD SURVEY INFORMATION AND EXISTING DRAWINGS. NEITHER THE SURVEYOR NOR THE ENGINEER MAKE GUARANTEES THAT THE UNDERGROUND UTILITIES SHOWN COMPRISE ALL SUCH UTILITIES IN THE AREA, EITHER IN SERVICE OR ABANDONED. THE SURVEYOR FURTHER DOES NOT WARRANT THAT THE UNDERGROUND UTILITIES SHOWN ARE IN THE EXACT LOCATION INDICATED, ALTHOUGH HE DOES CERTIFY THAT THEY ARE LOCATED AS ACCURATELY AS POSSIBLE FROM THE INFORMATION AVAILABLE.

GRAPHIC SCALE

20 0 10 20 40 80

( IN FEET )
1 inch = 20 ft.

I CERTIFY THAT THIS PLAT EXCEEDS THE MINIMUM REQUIREMENT FOR ACCURACY AND COMPLETENESS OF THE STATE OF N.H. AND OF THE CITY OF DOVER, N.H. – 1:10,000 –

KENNETH A. BERRY LLS 805 DATE 5-1-18

DOVER PLANNING #16–31C

| REVISION | DATE | DESCRIPTION |
|---|---|---|
| #3 | 4–27–18 | REVISE PER ABUTTER COMMENT |
| #2 | 3–27–18 | REVISED PER ZONING CHANGE |
| #1 | 2–19–18 | REVISED PER TRC COMMENTS |

EXISTING CONDITIONS PLAN
FOR
6 GROVE STREET RESIDENCES, LLC
FOR PROPERTY LOCATED AT
6 GROVE STREET, DOVER NH
*TAX MAP 31 LOT 14*

BERRY SURVEYING & ENGINEERING
335 SECOND CROWN POINT ROAD
BARRINGTON, NH 03825 (603)332–2863

SCALE : 1 IN. EQUALS 20 FT.
DATE : JANUARY 18, 2018
FILE NO. : DB 2016 – 090

STATE OF NEW HAMPSHIRE NO. 805 KENNETH A. BERRY LICENSED LAND SURVEYOR
SIGNATURE

SHEET 2 OF 21

*NOTES:*

1.) THE INTENT OF THIS PLAN SET IS TO DEMONSTRATE THE LIMITS OF CONSTRUCTION FOR THE PROPOSED SITE PLAN.

2.) CURRENT OWNER: 6 GROVE STREET RESIDENCES, LLC
35 THIRD STREET
DOVER, NH 03820

3.) APPLICANT: 6 GROVE STREET RESIDENCES, LLC
35 THIRD STREET
DOVER, NH 03820

4.) TAX MAP 31, LOT 14 OF THE CITY OF DOVER TAX ASSESSOR'S MAPS.

5.) LOT AREA: 46,238 Sq. Ft., 1.06 Ac.

6.) S.C.R.D. BOOK 4199, PAGE 508

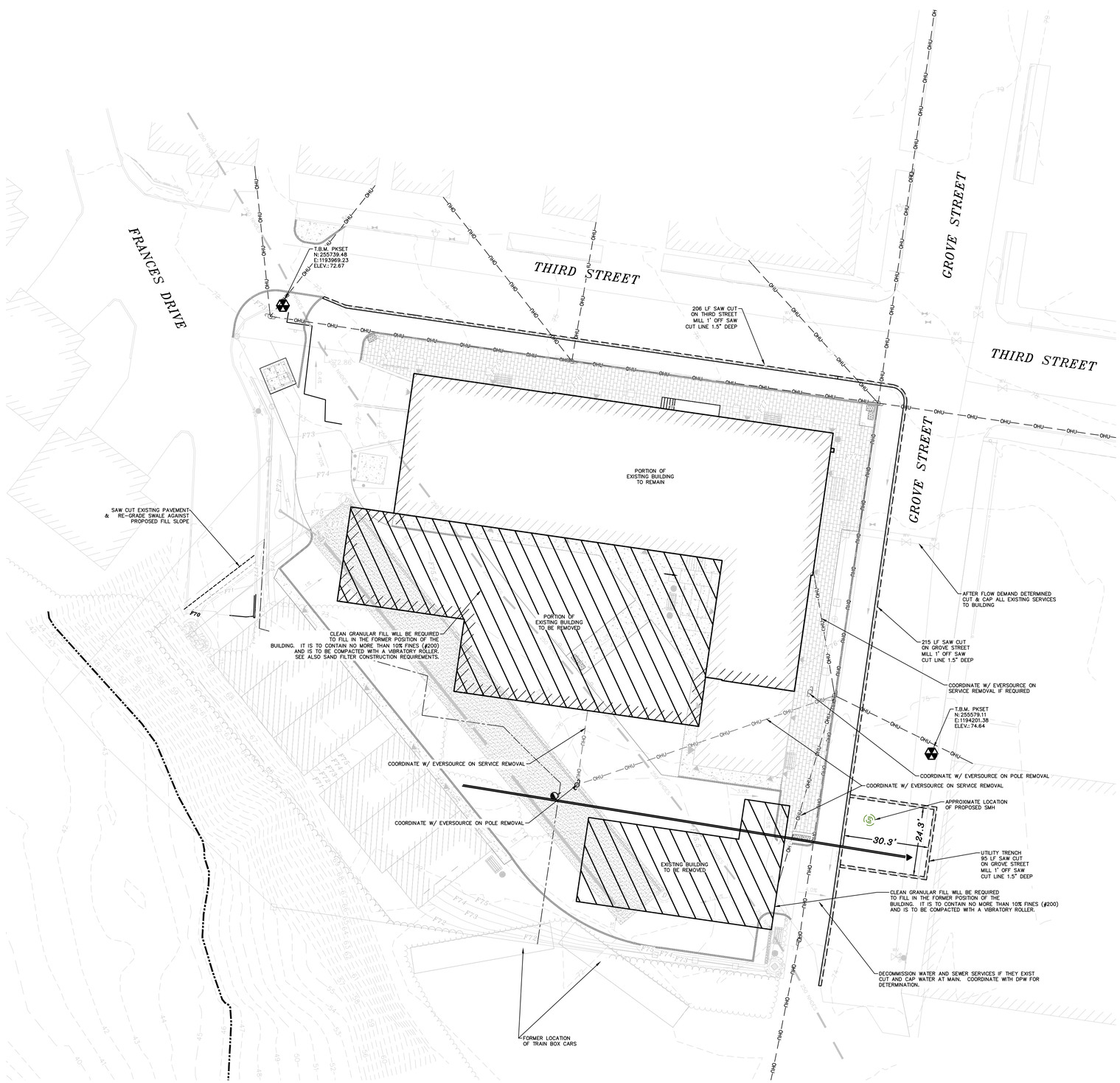


GRAPHIC SCALE

20 0 10 20 40 80

( IN FEET )
1 inch = 20 ft.

DOVER PLANNING #16-31C

| REVISION | DATE | DESCRIPTION |
|---|---|---|
| #3 | 4-27-18 | REVISE PER ABUTTER COMMENT |
| #2 | 3-27-18 | REVISED PER ZONING CHANGE |
| #1 | 2-19-18 | REVISED PER TRC COMMENTS |

DEMO PLAN AND PAVEMENT EXTENTS
FOR
6 GROVE STREET RESIDENCES, LLC
FOR PROPERTY LOCATED AT
6 GROVE STREET, DOVER NH
***TAX MAP 31 LOT 14***

BERRY SURVEYING & ENGINEERING
335 SECOND CROWN POINT ROAD
BARRINGTON, NH 03825 (603)332-2863

SCALE : 1 IN. EQUALS 20 FT.
DATE : JANUARY 18, 2018
FILE NO. : DB 2016 - 090

STATE OF NEW HAMPSHIRE
KENNETH A. BERRY
No. 14345
LICENSED
PROFESSIONAL ENGINEER

SHEET 3 OF 21

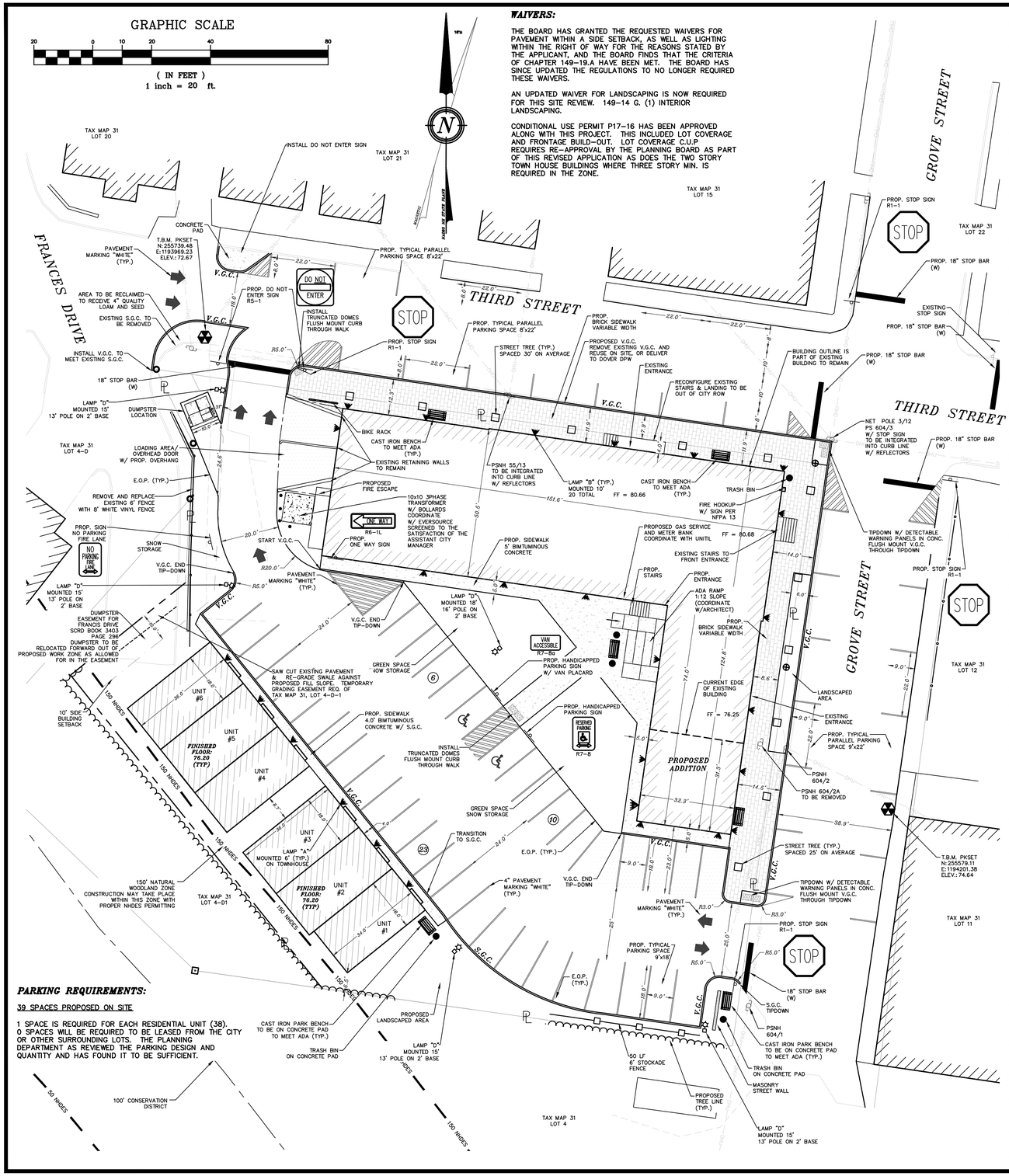


***WAIVERS:***

THE BOARD HAS GRANTED THE REQUESTED WAIVERS FOR PAVEMENT WITHIN A SIDE SETBACK, AS WELL AS LIGHTING WITHIN THE RIGHT OF WAY FOR THE REASONS STATED BY THE APPLICANT, AND THE BOARD FINDS THAT THE CRITERIA OF CHAPTER 149-19.A HAVE BEEN MET. THE BOARD HAS SINCE UPDATED THE REGULATIONS TO NO LONGER REQUIRED THESE WAIVERS.

AN UPDATED WAIVER FOR LANDSCAPING IS NOW REQUIRED FOR THIS SITE REVIEW. 149-14 G. (1) INTERIOR LANDSCAPING.

CONDITIONAL USE PERMIT P17-16 HAS BEEN APPROVED ALONG WITH THIS PROJECT. THIS INCLUDED LOT COVERAGE AND FRONTAGE BUILD-OUT. LOT COVERAGE C.U.P REQUIRES RE-APPROVAL BY THE PLANNING BOARD AS PART OF THIS REVISED APPLICATION AS DOES THE TWO STORY TOWN HOUSE BUILDINGS WHERE THREE STORY MIN. IS REQUIRED IN THE ZONE.

***PARKING REQUIREMENTS:***

39 SPACES PROPOSED ON SITE

1 SPACE IS REQUIRED FOR EACH RESIDENTIAL UNIT (38). 0 SPACES WILL BE REQUIRED TO BE LEASED FROM THE CITY OR OTHER SURROUNDING LOTS. THE PLANNING DEPARTMENT AS REVIEWED THE PARKING DESIGN AND QUANTITY AND HAS FOUND IT TO BE SUFFICIENT.

*NOTES:*

1.) THE INTENT OF THIS PLAN SET IS TO DEMONSTRATE THE SITE PLAN DESIGN OF A MIXED USE BUILDING AT 6 GROVE STREET WITH COMMERCIAL SPACE ON THE FIRST FLOOR, 32 RESIDENTIAL UNITS ON THE SECOND, THIRD, AND FOURTH FLOORS, AND 6 PROPOSED TOWNHOUSES. 38 TOTAL RESIDENTIAL UNITS.

2.) CURRENT OWNER: 6 GROVE STREET RESIDENCES, LLC
35 THIRD STREET
DOVER, NH 03820

3.) APPLICANT: 6 GROVE STREET RESIDENCES, LLC
35 THIRD STREET
DOVER, NH 03820

4.) THE PROJECT PARCEL IS SHOWN AS LOT NO. 14, MAP 31 OF THE CITY OF DOVER TAX ASSESSOR'S MAPS.

5.) THE PROJECT PARCEL CONTAINS 0.93 ACRES OR 40,821 SQURE FEET AREA OF LAND.

6.) PROJECT PLAN REFERENCES: S.C.R.D. BOOK 4199, PAGE 508

7.) EXISTING IMPERVIOUS AREA ON LOT = 25,255 Sq.Ft. (61.9% OF LOT)
PROPOSED IMPERVIOUS AREA ON LOT = 36,063 Sq.Ft. (88.3% OF LOT)

8.) EXISTING IMPERVIOUS AREA ON LOT WITHIN 250' OF SHORELAND ZONE = 7,665 Sq.Ft.
(34.7% OF LOT WITHIN SHORELAND ZONE)
PROPOSED IMPERVIOUS AREA ON LOT WITHIN 250' OF SHORELAND ZONE = 17,436 Sq.Ft.
(79.0% OF LOT WITHIN SHORELAND ZONE)

9.) EXISTING PRINCIPAL BUILDING LOT COVERAGE = 15,927 Sq.Ft. (39.0% OF LOT)
PROPOSED PRINCIPAL BUILDING LOT COVERAGE = 14,526 Sq.Ft. (35.58% OF LOT)

10.) EXISTING PRINCIPAL BUILDING FRONTAGE BUILD-OUT (GROVE STREET) = 93.49' (46.7%)
PROPOSED PRINCIPAL BUILDING FRONTAGE BUILD-OUT (GROVE STREET) = 147.75' (73.7%)
EXISTING PRINCIPAL BUILDING FRONTAGE BUILD-OUT (THIRD STREET) = 151.60' (67.1%)
PROPOSED PRINCIPAL BUILDING FRONTAGE BUILD-OUT (THIRD STREET) = 171.39' (75.8%)

11.) ZONING NOTES: CBD CENTRAL BUSINESS DISTRICT ZONE, TRANSIT ORIENTED DEVELOPMENT SUB-DISTRICT

| | |
|---|---|
| MINIMUM LOT SIZE: | N/A |
| MINIMUM FRONTAGE: | N/A |
| BUILDING SETBACK REQUIREMENTS: | |
| FRONT (EXISTING) : | 0 FEET |
| SIDE : | 10 FT MIN, 25 FT MAX |
| REAR : | 0 FT MIN, 25 FT MAX |
| LOT COVERAGE: | 75 PERCENT MIN |
| FRONTAGE BUILD-OUT: | 80 PERCENT MIN |
| MAXIMUM BUILDING HEIGHT: | 3 STORY MIN, 5 STORY MAX |

12.) I HEREBY CERTIFY THAT, TO THE BEST OF MY KNOWLEDGE & BELIEF, THIS PARCEL DOES NOT FALL WITHIN THE FLOOD PLAIN FLOOD HAZARD REF.: FEMA COMMUNITY #330145, MAP #33017C03103, DATED SEPTEMBER 30, 2015.

13.) VERTICAL DATUM IS BASED ON NAVD88 (USGS) ELEVATIONS. HORIZONTAL COORDINATES ARE BASED ON NAD83. COORDINATES WERE GATHERED USING TOPCON HIPER SR SURVEY GRADE GPS RECEIVERS.

14.) PROPERTY LINE INFORMATION HAS BEEN OBTAINED FROM A SURVEY PERFORMED BY BERRY SURVEYING & ENGINEERING IN APRIL OF 2016, WITH AN ERROR NOT GREATER THAN 1 IN 125,521 & UPDATED IN NOVEMBER 2017.

15.) TOPOGRAPHIC SURVEY PERFORMED BY BERRY SURVEYING & ENGINEERING IN APRIL OF 2016 & UPDATED IN NOVEMBER 2017.

16.) AS-BUILT PLANS OF THE SITE SHALL BE SUBMITTED ON PAPER AND IN A DIGITAL FORMAT IN PDF AND AUTOCAD DWG, AUTOCAD DXF OR AN ESRI FORMAT TO THE CITY OF DOVER ENGINEER'S OFFICE UPON COMPLETION OF PROJECT. AS-BUILT PLANS SHALL BE PREPARED AND CERTIFIED CORRECT BY A L.L.S. OR P.E. DIGITAL FILES SHALL BE GEO-REFERENCED TO NEW HAMPSHIRE STATE PLANE COORDINATES NAD83 AND SHALL BE EXPRESSED IN FEET.

17.) EXTERIOR LIGHTING SHALL BE CUT-OFF TYPE FIXTURES PER CHAPTER 149-14-E AND SHALL PROVIDE LIGHTING DIRECTED ON-SITE ONLY EXCEPT WHERE WAIVED BY THE PLANNING BOARD FOR PROVIDING LIGHT WITHIN THE RIGHT OF WAY.

18.) THE PROPOSED STRUCTURES SHALL BE SERVED BY SPRINKLER SYSTEMS AS REQUIRED UNDER CHAPTER 109-30 OF THE CODE OF THE CITY OF DOVER AND THE 2009 STATE BUILDING CODES.

19.) SPRINKLER CONNECTIONS MUST BE FLUSHED IN ACCORDANCE WITH NFPA 24 AND A CONTRACTOR'S MATERIALS AND TEST CERTIFICATE FOR UNDERGROUND PIPING FORM MUST BE COMPLETED.

20.) FIRE DEPARTMENT CONNECTIONS SHALL BE LOCATED ON THE STREET SIDE OF THE BUILDING PER NFPA 13.

21.) A SECURITY SYSTEM SHALL BE INSTALLED AS REQUIRED BY CHAPTER 58, ARTICLE I, SECTION 58-2 OF THE CODE OF THE CITY OF DOVER.

22.) THE INSTALLATION OF ELECTRIC POWER, CABLE TELEVISION AND TELEPHONE LINES SHALL BE UNDERGROUND THROUGHOUT THE SITE FOR WHICH DEVELOPMENT IS PROPOSED. SITE PLAN SHALL SHOW ANY EASEMENTS FOR THESE SERVICES. WHERE OVERHEAD LINES ATTACH TO THE EXISTING STRUCTURE ON SITE, THEY MAY REMAIN.

23.) THE SUBJECT PARCEL IS SERVED BY MUNICIPAL WATER AND SEWER.

24.) ALL MATERIALS AND CONSTRUCTION SHALL CONFORM TO APPLICABLE CITY AND STATE CODES.

25.) BACKFLOW PREVENTORS SHALL BE PROVIDED FOR BOTH FIRE AND DOMESTIC WATER LINES.

26.) ALL EROSION CONTROL NOTES SHALL INCLUDE PROVISIONS FOR CONSTRUCTION SEQUENCING, TEMPORARY EROSION CONTROL MEASURES, AND PERMANENT STANDARDS SUCH AS LOAM SPREAD RATE FOR DISTURBED AREAS, RATES OF LIME, TYPE AND RATES FOR FERTILIZER, AND SEED AND MULCH MIXTURE WITH RATES OF APPLICATION.

27.) THE LIMITS OF CONSTRUCTION DISTURBANCE THAT ARE LOCATED IN OR WITHIN 50' OF CONSERVATION AND WETLAND DISTRICTS SHALL BE STAKED, FLAGGED, AND CLEARLY IDENTIFIED PRIOR TO THE COMMENCEMENT OF SITE WORK.

28.) A LETTER OF CREDIT FOR THE COST OF RE-VEGETATING ALL DISTURBED AREAS ON THE SITE SHALL BE SUBMITTED PRIOR TO ANY EARTH DISTURBING ACTIVITY OCCURS. COORDINATE WITH CITY OF DOVER, COMMUNITY SERVICES AND ENGINEERING DEPARTMENT.

29.) A PRE-CONSTRUCTION CONFERENCE WITH THE DEVELOPER, THE DESIGN ENGINEER, THE EARTHWORK CONTRACTOR AND THE CITY ENGINEER SHALL OCCUR PRIOR TO ANY EARTH DISTURBING ACTIVITY.

30.) BUILDING ADDRESSES SHALL BE ASSIGNED BY THE BUILDING OFFICIAL AT THE TIME OF ISSUANCE OF A BUILDING PERMIT.

31.) THE PROPOSED USE FOR THE SITE IS MIXED USE COMMERCIAL/RESIDENTIAL.

32.) THIS PLAN PROPOSES APPROXIMATELY 32,126 SQ. FT. OF DISTURBANCE.

33.) CALL DIG SAFE PRIOR TO BEGINNING WORK (1-888-344-7233)

34.) ALL CONSTRUCTION SHALL CONFORM TO THE STATE OF NEW HAMPSHIRE DEPARTMENT OF TRANSPORTATION STANDARD SPECIFICATIONS FOR ROAD AND BRIDGE CONSTRUCTION. CONSTRUCTION SHALL ALSO CONFORM TO THE CITY OF DOVER POLICIES AND PRACTICES.

35.) WRITTEN DIMENSION ON THIS PLAN TAKE PRECEDENCE OVER SCALED DIMENSIONS. THE CONTRACTOR SHALL USE CAUTION WHEN SCALING REPRODUCED PLANS. IN THE EVENT OF A CONFLICT BETWEEN THIS PLAN SET AND ANY OTHER DRAWINGS AND/OR SPECIFICATIONS, THE ENGINEER SHALL BE NOTIFIED BY THE CONTRACTOR PRIOR TO CONSTRUCTION. CONTRACTOR IS TO CONFIRM ALL ELEVATIONS. CONFLICTS WILL BE REPORTED TO THE DESIGN ENGINEER PRIOR TO CONSTRUCTION.

36.) SNOW STORAGE AREAS ARE AS SHOWN ON THIS SITE PLAN. EXCESS SNOW WILL BE REMOVED FROM THIS SITE AND DISPOSED OF IN A QUALIFIED LOCATION.

37.) CONDITIONAL USE PERMITS HAVE BEEN REQUESTED FOR THE FOLLOWING:
PRINCIPAL BUILDING COVERAGE LESS THAN 75%
PRINCIPAL BUILDING FRONTAGE BUILD-OUT LESS THAN 80% (APPROVED ON PRIOR APPLICATION)
TWO STORY TOWNHOUSES WHERE THREE STORY IS REQUIRED.

38.) THE OWNER OF RECORD SHALL RECORD AT THE REGISTRY OF DEEDS DOCUMENTATION SUFFICIENT TO PROVIDE NOTICE TO ALL PERSONS THAT MAY ACQUIRE ANY PROPERTY SUBJECT TO THE REQUIREMENTS AND RESPONSIBILITIES DESCRIBED IN THE APPROVED STORMWATER MANAGEMENT PLAN. THE NOTICE SHALL COMPLY WITH THE APPLICABLE REQUIREMENTS FOR RECORDING CONTAINED IN RSA 477 AND 478. THE NOTICE NEED NOT SET FORTH THE REQUIREMENTS AT LENGTH, SO LONG AS IT IS SUFFICIENT TO PROVIDE NOTICE TO PROSPECTIVE PURCHASERS TO THE REQUIREMENTS FOR MAINTENANCE AND REPORTING.

39.) SITE CONSTRUCTION HOURS SHALL BE LIMITED TO MONDAY-FRIDAY 7 AM – 6 PM, SATURDAY 9 AM – 4 PM, WITH NO SUNDAY HOURS. HOURS OF CONSTRUCTION MUST BE DOCUMENTED ON A SITE CONSTRUCTION SIGN ALONG WITH THE CONTACT INFORMATION FOR THE GENERAL CONTRACTOR. SAID SIGNAGE MUST BE LOCATED AND APPROVED BY THE CITY ENGINEER OR ASSISTANT CITY MANAGER.

40.) THE LAUNDRY ON THE FIRST FLOOR OF THE MIXED USE BUILDING IS TO BE OPEN FOR PUBLIC USE. REASONABLE BUSINESS HOURS MONDAY THROUGH SATURDAY WILL BE KEPT. NO SUNDAY HOURS WILL BE OFFERED TO THE PUBLIC.

41.) ALL APPLICABLE RIGHT-OF-WAY, CONSERVATION, SLOPE, CONSTRUCTION, UTILITY, ACCESS, OR OTHER EASEMENTS SHALL BE REFERENCED IN A NOTE AND SHOWN ON THE PLAN.

42.) COMMERCIAL VEHICLE ROUTE DURING CONSTRUCTION SHALL CONFORM WITH THE DOVER CITY CODE OR BE COORDINATED WITH THE COMMUNITY SERVICES DIRECTOR.

43.) THE SITE LAYOUT IS DESIGNED IN COMPLIANCE WITH APPLICABLE ACCESSIBILITY REGULATIONS. THE PROPOSED STRUCTURE, AND REVISIONS TO THE EXISTING STRUCTURE, WILL ALSO BE DESIGNED IN ACCORDANCE WITH APPLICABLE ACCESSIBILITY REGULATIONS. THE SITE AND BUILDING WILL BE IN COMPLIANCE WITH NH RSA 155-A: 5.

44.) THE SITE SHALL BE ACCESSIBLE IN ALL WEATHER CONDITIONS YEAR ROUND.

DOVER PLANNING #16-31C

| REVISION | DATE | DESCRIPTION |
|---|---|---|
| #3 | 4-27-18 | REVISE PER ABUTTER COMMENT |
| #2 | 3-27-18 | REVISED PER ZONING CHANGE |
| #1 | 2-19-18 | REVISED PER TRC COMMENTS |

PROPOSED SITE PLAN
FOR
6 GROVE STREET RESIDENCES, LLC
FOR PROPERTY LOCATED AT
6 GROVE STREET, DOVER NH
***TAX MAP 31 LOT 14***

BERRY SURVEYING & ENGINEERING
335 SECOND CROWN POINT ROAD
BARRINGTON, NH 03825 (603)332-2863

SCALE : 1 IN. EQUALS 20 FT.
DATE : JANUARY 18, 2018
FILE NO. : DB 2016 – 090

STATE OF NEW HAMPSHIRE
KENNETH A. BERRY
No. 13241
LICENSED
PROFESSIONAL ENGINEER

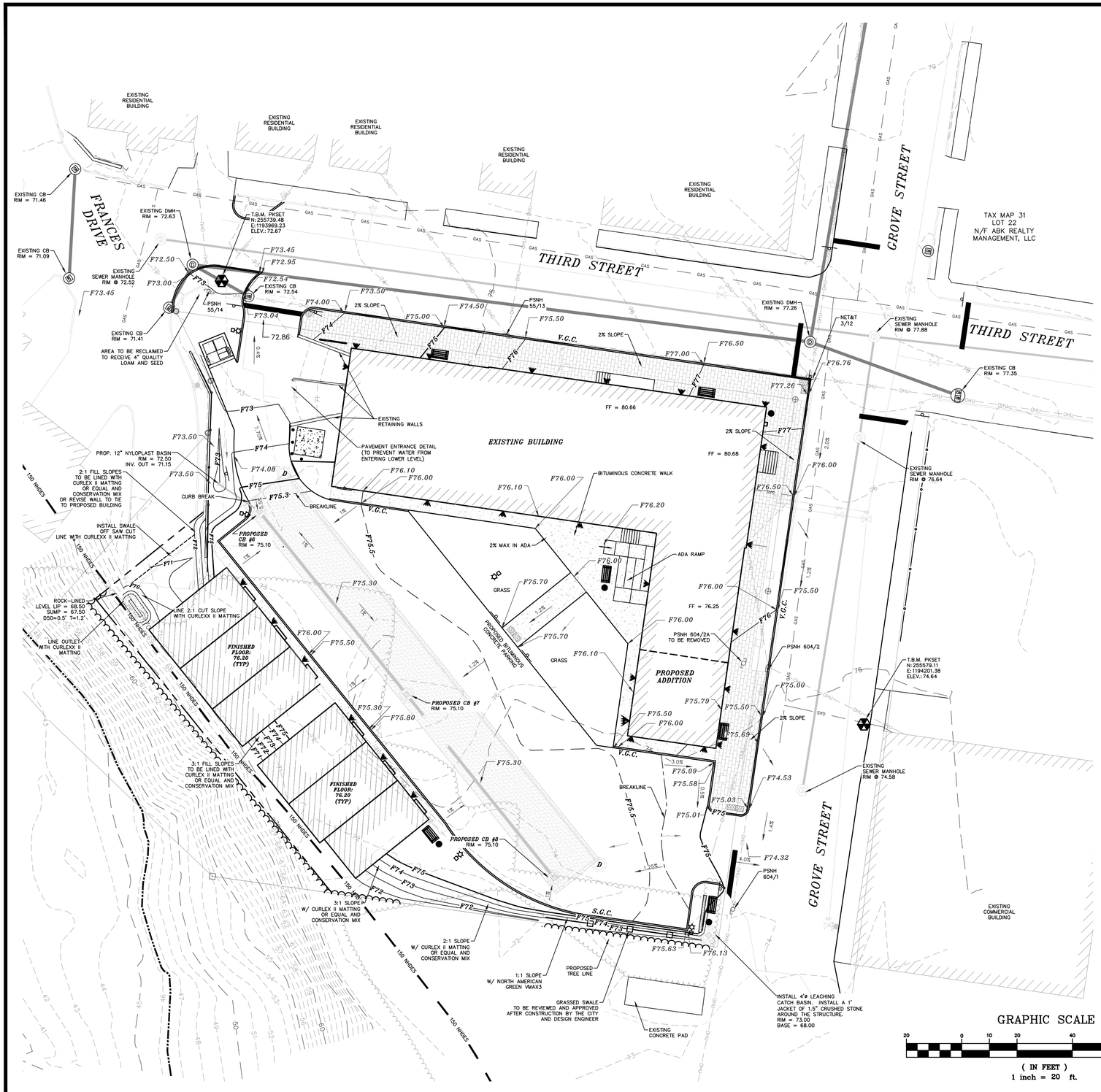


*NOTES:*

1.) THE INTENT OF THIS PLAN SET IS TO DEMONSTRATE THE GRADING DESIGN OF THE SITE AT 6 GROVE STREET.

2.) CURRENT OWNER: 6 GROVE STREET RESIDENCES, LLC
35 THIRD STREET
DOVER, NH 03820

3.) APPLICANT: 6 GROVE STREET RESIDENCES, LLC
35 THIRD STREET
DOVER, NH 03820

4.) TAX MAP 31, LOT 14 OF THE CITY OF DOVER TAX ASSESSOR'S MAPS.

5.) UNDERGROUND UTILITY LOCATIONS ARE BASED UPON BEST AVAILABLE EVIDENCE AND ARE NOT FIELD VERIFIED. LOCATING AND PROTECTING ANY ABOVE AND BELOW GROUND UTILITIES IS THE SOLE RESPONSIBILITY OF THE CONTRACTOR. ANY UTILITY CONFLICTS SHOULD BE REPORTED IMMEDATELY TO THE DESIGN ENGINEER.

6.) THE CONTRACTOR SHALL CALL AND COORDINATE WITH DIGSAFE AT 1-888-344-7233 AT LEAST 72 HOURS PRIOR TO COMMENCING ANY EXCAVATION ON PUBLIC OR PRIVATE PROPERTY.

7.) SEE DETAILS CONCERNING SITE LAYOUT, DRAINAGE, UTILITY, AND SEDIMENT AND EROSION CONTROLS.

8.) ALL DRAINAGE PIPE IS TO BE HDPE N-12. INDIVIDUAL PIPE SIZES ARE SPECIFIED, RECYCLED PIPE IS APPROVED FOR PROJECT SITE. RECYCLED HDPE PIPE "GREEN PIPE" IS ACCEPTABLE FOR THIS PROJECT SITE.

9.) ALL ELEVATIONS TO BE VERIFIED BY THE CONTRACTOR PRIOR TO CONSTRUCTION. THE DESIGN ENGINEER IS TO BE NOTIFIED IMMEDIATELY OF ANY DISCREPANCY. TEMPORARY BENCHMARKS (T.B.M.) ARE TO BE PROVIDED BY THE DESIGN ENGINEER.

10.) UPON FINAL COMPLETION AND 85% STABILIZATION, THE EXISTING CATCH BASIN ON THE THIRD STREET SIDE OF THE PROPERTY IS TO BE CLEANED OF ALL DEBRIS, INCLUDING THE PUMPING OF THE BASIN SUMP.

11.) ALL UNPAVED AREAS ARE TO RECEIVE 4" QUALITY LOAM AND SEED.

12.) ALL BASINS AND DRAINS ARE TO HAVE BOOTS INSTALLED ON ALL INLETS AND OUTLETS.

13.) ARCHITECT TO WORK OUT ALL GRADING AT THRESHOLDS WITH BS&E FOR ADA & BUILDING CODE COMPLIANCE PRIOR TO BUILDING OF PROJECT.

DOVER PLANNING #16-31C

| REVISION | DATE | DESCRIPTION |
|---|---|---|
| #3 | 4-27-18 | REVISE PER ABUTTER COMMENT |
| #2 | 3-27-18 | REVISED PER ZONING CHANGE |
| #1 | 2-19-18 | REVISED PER TRC COMMENTS |

GRADING PLAN
FOR
6 GROVE STREET RESIDENCES, LLC
FOR PROPERTY LOCATED AT
6 GROVE STREET, DOVER NH
***TAX MAP 31 LOT 14***

BERRY SURVEYING & ENGINEERING
335 SECOND CROWN POINT ROAD
BARRINGTON, NH 03825 (603)332-2863

SCALE : 1 IN. EQUALS 20 FT.
DATE : JANUARY 18, 2018
FILE NO. : DB 2016 - 090

STATE OF NEW HAMPSHIRE
KENNETH A. BERRY
No. 7435
LICENSED
PROFESSIONAL ENGINEER

SHEET 5 OF 21

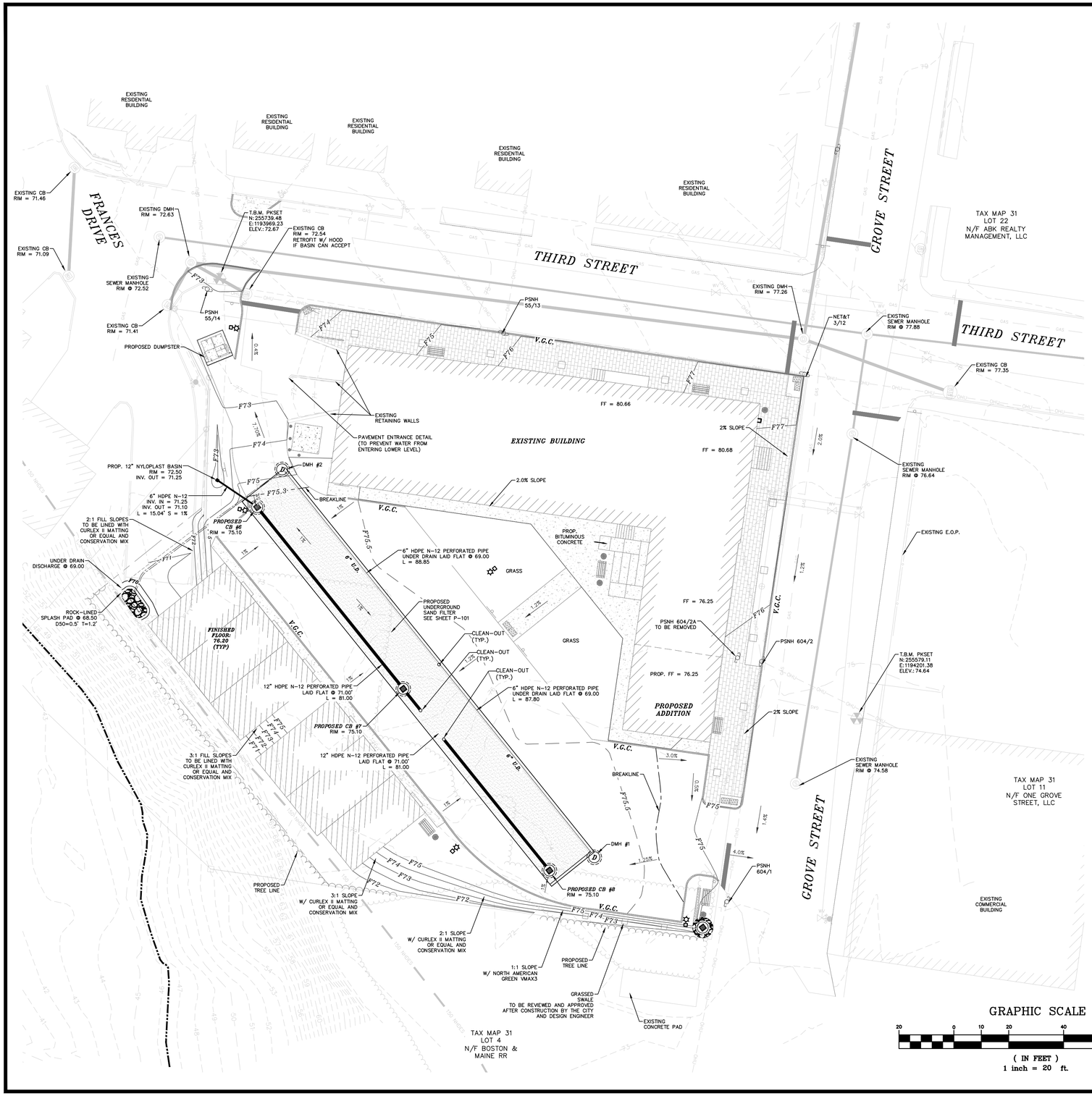


*NOTES:*

1.) THE INTENT OF THIS PLAN SET IS TO DEMONSTRATE THE DRAINAGE DESIGN OF THE SITE AT 6 GROVE STREET.

2.) CURRENT OWNER: 6 GROVE STREET RESIDENCES, LLC
35 THIRD STREET
DOVER, NH 03820

3.) APPLICANT: 6 GROVE STREET RESIDENCES, LLC
35 THIRD STREET
DOVER, NH 03820

4.) TAX MAP 31, LOT 14 OF THE CITY OF DOVER TAX ASSESSOR'S MAPS.

5.) UNDERGROUND UTILITY LOCATIONS ARE BASED UPON BEST AVAILABLE EVIDENCE AND ARE NOT FIELD VERIFIED. LOCATING AND PROTECTING ANY ABOVE AND BELOW GROUND UTILITIES IS THE SOLE RESPONSIBILITY OF THE CONTRACTOR. ANY UTILITY CONFLICTS SHOULD BE REPORTED IMMEDATELY TO THE DESIGN ENGINEER.

6.) THE CONTRACTOR SHALL CALL AND COORDINATE WITH DIGSAFE AT 1-888-344-7233 AT LEAST 72 HOURS PRIOR TO COMMENCING ANY EXCAVATION ON PUBLIC OR PRIVATE PROPERTY.

7.) SEE DETAILS CONCERNING SITE LAYOUT, DRAINAGE, UTILITY, AND SEDIMENT AND EROSION CONTROLS.

8.) ALL DRAINAGE PIPE IS TO BE HDPE N-12. INDIVIDUAL PIPE SIZES ARE SPECIFIED, RECYCLED PIPE IS APPROVED FOR PROJECT SITE. RECYCLED HDPE PIPE "GREEN PIPE" IS ACCEPTABLE FOR THIS PROJECT SITE.

9.) ALL ELEVATIONS TO BE VERIFIED BY THE CONTRACTOR PRIOR TO CONSTRUCTION. THE DESIGN ENGINEER IS TO BE NOTIFIED IMMEDIATELY OF ANY DISCREPANCY. TEMPORARY BENCHMARKS (T.B.M.) ARE TO BE PROVIDED BY THE DESIGN ENGINEER.

10.) UPON FINAL COMPLETION AND 85% STABILIZATION, THE EXISTING CATCH BASIN ON THE THIRD STREET SIDE OF THE PROPERTY IS TO BE CLEANED OF ALL DEBRIS, INCLUDING THE PUMPING OF THE BASIN SUMP.

11.) ALL UNPAVED AREAS ARE TO RECEIVE 4" QUALITY LOAM AND SEED.

12.) ALL BASINS AND DRAINS ARE TO HAVE BOOTS INSTALLED ON ALL INLETS AND OUTLETS.

13.) ALL CATCH BASINS SHALL BE PRE-CAST H-20 LOADING AND SHALL BE EQUIPPED WITH DEEP SUMPS (4' MIN.) AND HOODS (SEE DETAILS) HOODS ARE TO BE "THE ELIMINATOR" BY KLEANSTREAM. RIMS ARE TO BE REXUS STYLE AND SHALL BE SET FLUSH WITH FINISH GRADE, UNLESS OTHERWISE INSTRUCTED DURING CONSTRUCTION BY ROCHESTER DPW. RIMS ABOVE FINISH GRADE WILL BE NOT BE ACCEPTED. ALL RIMS, GRATES AND COVERS ARE TO BE U.S.A MADE.

14.) ARCHITECT TO COORDINATE ROOF DRAINS WITH BS&E PRIOR TO BID.

*STRUCTURE CHART*

*CB #6*
4'ø WITH REXUS GRATE
RIM = 75.10 (FLUSH)
INV. OUT = 71.00 12" HDPE N-12 PERFORATED
W/ 4' SUMP & HOOD
SUMP ELEV. = 67.00

*CB #7*
4'ø WITH REXUS GRATE
RIM = 75.10 (FLUSH)
INV. OUT = 71.00 12" HDPE N-12 PERFORATED
W/ 4' SUMP & HOOD
SUMP ELEV. = 67.00

*CB #8*
4'ø WITH REXUS GRATE
RIM = 75.10 (FLUSH)
INV. OUT = 71.00 12" HDPE N-12 PERFORATED
W/ 4' SUMP & HOOD
SUMP ELEV. = 67.00

*DRAIN MANHOLE #1*
5'ø W/PAMREX
RIM = 75.29 (FLUSH)
INV. OUT = 69.00
W/ 2' SUMP
SUMP ELEV. = 67.00

*DRAIN MANHOLE #2*
5'ø W/PAMREX
RIM = 74.84 (FLUSH)
INV. IN = 69.00
INV. OUT = 69.00
W/ 2' SUMP
SUMP ELEV. = 66.00

*CLEANOUT #1*
RIM = 75.28 (FLUSH)
INV. = 69.00
W/ 2' SUMP
SUMP ELEV. = 67.00

DOVER PLANNING #16-31C

| REVISION | DATE | DESCRIPTION |
|---|---|---|
| #3 | 4-27-18 | REVISE PER ABUTTER COMMENT |
| #2 | 3-27-18 | REVISED PER ZONING CHANGE |
| #1 | 2-19-18 | REVISED PER TRC COMMENTS |

DRAINAGE PLAN
FOR
6 GROVE STREET RESIDENCES, LLC
FOR PROPERTY LOCATED AT
6 GROVE STREET, DOVER NH
***TAX MAP 31 LOT 14***

BERRY SURVEYING & ENGINEERING
335 SECOND CROWN POINT ROAD
BARRINGTON, NH 03825 (603)332-2863

SCALE : 1 IN. EQUALS 20 FT.
DATE : JANUARY 18, 2018
FILE NO. : DB 2016 - 090

STATE OF NEW HAMPSHIRE
KENNETH A. BERRY
No. 14240
LICENSED
PROFESSIONAL ENGINEER

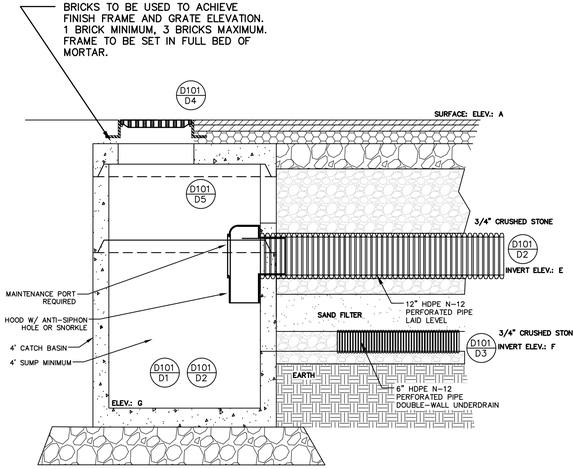


PROFILE OF SAND FILTER & CATCH BASIN

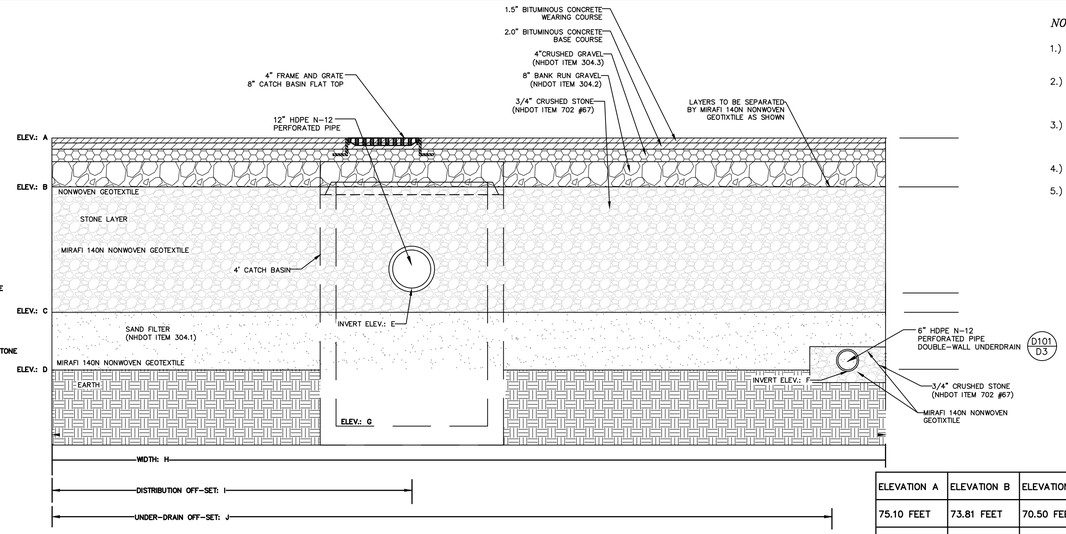


SECTION OF SAND FILTER

*NOTES:*

1.) THE INTENT OF THIS PLAN SET IS TO SHOW THE DETAIL OF THE SAND FILTER DRAINAGE DESIGN OF THE SITE AT 6 GROVE STREET.

2.) CURRENT OWNER: 6 GROVE STREET RESIDENCES, LLC
35 THIRD STREET
DOVER, NH 03820

3.) APPLICANT: 6 GROVE STREET RESIDENCES, LLC
35 THIRD STREET
DOVER, NH 03820

4.) TAX MAP 31, LOT 14 OF THE CITY OF DOVER TAX ASSESSOR'S MAPS.

5.) SITE WILL BE ACCESSIBLE IN ALL WEATHER CONDITIONS YEAR ROUND.

CRUSHED STONE BEDDING *

| SIEVE SIZE | % PASSING BY WEIGHT |
|---|---|
| 1" | 100 |
| 3/4" | 90 – 100 |
| 3/8" | 20 – 55 |
| # 4 | 0 –10 |
| # 8 | 0 – 5 |

* EQUIVALENT TO STANDARD STONE SIZE #67 – SECTION 702 OF NHDOT NHDOT STANDARD SPECIFICATIONS

*SAND FILTER DRAINAGE SYSTEM*

NOT TO SCALE

| ELEVATION A | ELEVATION B | ELEVATION C | ELEVATION D | ELEVATION E | ELEVATION F | ELEVATION G | DISTANCE H | DISTANCE I | DISTANCE J |
|---|---|---|---|---|---|---|---|---|---|
| 75.10 FEET | 73.81 FEET | 70.50 FEET | 69.00 FEET | 71.00 FEET | 69.00 FEET | 67.00 FEET | 20.0 FEET | 3.00 FEET | 18.50 FEET |
| SURFACE | TOP OF SYSTEM | TOP OF SAND FILTER | BOTTOM OF SYSTEM | DISTRIBUTION CULVERT | UNDER DRAIN | SUMP ELEVATION | SYSTEM WIDTH | DISTRIBUTION OFF-SET | UNDER-DRAIN OFF-SET |

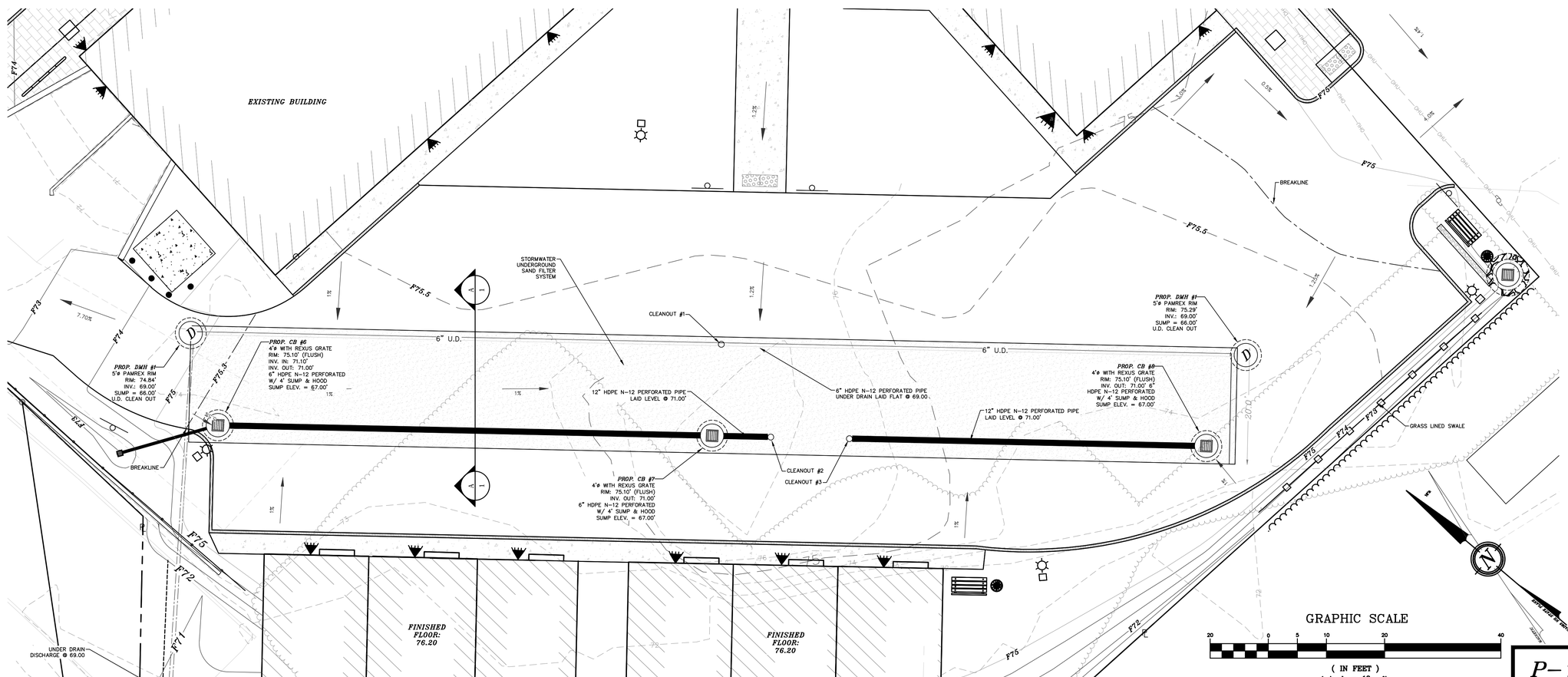


P–101

DOVER PLANNING #16–31C

| REVISION | DATE | DESCRIPTION |
|---|---|---|
| #3 | 4–27–18 | REVISE PER ABUTTER COMMENT |
| #2 | 3–27–18 | REVISED PER ZONING CHANGE |
| #1 | 2–19–18 | REVISED PER TRC COMMENTS |

UNDERGROUND SAND FILTER DETAILS
FOR
6 GROVE STREET RESIDENCES, LLC
FOR PROPERTY LOCATED AT
6 GROVE STREET, DOVER NH
***TAX MAP 31 LOT 14***

BERRY SURVEYING & ENGINEERING
335 SECOND CROWN POINT ROAD
BARRINGTON, NH 03825 (603)332–2863

SCALE : 1 IN. EQUALS 10 FT.
DATE : JANUARY 18, 2018
FILE NO. : DB 2016 – 090

STATE OF NEW HAMPSHIRE
KENNETH A. BERRY
NO. 14043
LICENSED
PROFESSIONAL ENGINEER

SHEET 7 OF 21

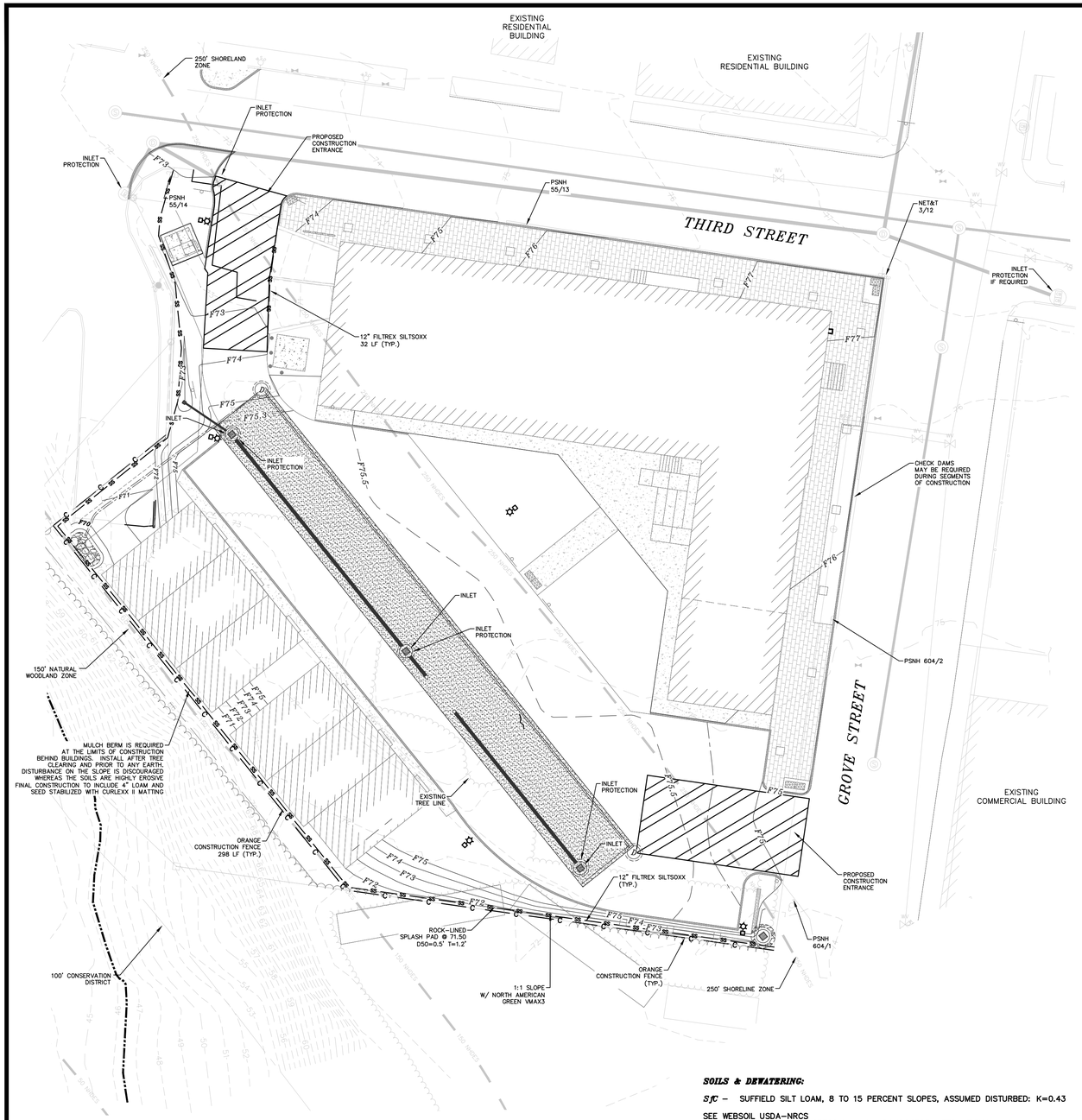


***NOTES:***

1.) OWNER: 6 GROVE STREET RESIDENCES, LLC
35 THIRD STREET
DOVER, NH 03820

APPLICANT: 6 GROVE STREET RESIDENCES, LLC
35 THIRD STREET
DOVER, NH 03820

2.) TAX MAP 31, LOT 14 OF THE CITY OF DOVER TAX ASSESSOR'S MAPS

3.) THE PURPOSE OF THIS PLAN IS TO DEMONSTRATE PROPER SEDIMENT AND EROSION CONTROL DURING CONSTRUCTION.

4.) UNDERGROUND UTILITY LOCATIONS ARE BASED UPON BEST AVAILABLE EVIDENCE AND ARE NOT FIELD VERIFIED. LOCATING AND PROTECTING ANY ABOVE AND BELOW GROUND UTILITIES IS THE SOLE RESPONSIBILITY OF THE CONTRACTOR. ANY UTILITY CONFLICTS SHOULD BE REPORTED IMMEDIATELY TO THE DESIGN ENGINEER.

5.) THE CONTRACTOR SHALL CALL AND COORDINATE WITH DIGSAFE 1-888-344-7233 AT LEAST 72 HOURS PRIOR TO COMMENCING ANY EXCAVATION ON PUBLIC OR PRIVATE PROPERTY.

6.) SEE DETAILS CONCERNING SITE LAYOUT, DRAINAGE, UTILITY AND SEDIMENT AND EROSION CONTROLS.

7.) ALL ELEVATIONS TO BE VERIFIED BY THE CONTRACTOR PRIOR TO CONSTRUCTION. THE DESIGN ENGINEER IS TO BE NOTIFIED IMMEDIATELY OF ANY DISCREPANCY. TEMPORARY BENCHMARKS (T.B.M.) ARE TO BE PROVIDED BY THE DESIGN ENGINEER.

8.) UPON FINAL COMPLETION AND 85% STABILIZATION THE DRAINAGE SYSTEM IS TO BE CLEANED OF ALL DEBRIS TO INCLUDE THE PUMPING OF THE BASIN SUMPS.

9.) ALL UNPAVED AREAS ARE TO RECEIVE 4" QUALITY LOAM AND SEED.

10.) ALL DRAINAGE PIPE IS TO BE HDPE N-12. INDIVIDUAL PIPE SIZES ARE SPECIFIED, RECYCLED PIPE IS APPROVED FOR PROJECT SITE. RECYCLED HDPE PIPE "GREEN PIPE" IS ACCEPTABLE FOR THIS PROJECT SITE.

11.) SEE ALSO "STORMWATER SYSTEM OPERATIONS AND MAINTENANCE PLAN & INSPECTION AND MAINTENANCE MANUAL" DATED 1-23-17 WITH BMP PLAN WHICH REQUIRES INSPECTION AND MAINTENANCE RECORDS BE SUPPLIED TO CITY OF DOVER, NH COMMUNITY SERVICES DEPARTMENT.

12.) INSPECTIONS TO BE CONDUCTED ONCE PER EVERY SEVEN DAYS AND AT AN INCREASED FREQUENCY INCLUDING WITHIN 24-HOURS OF A 0.25 INCH RAIN EVENT. INSPECTIONS TO BE CONDUCTED BY A "QUALIFIED PERSON" AS DEFINED BY EPA CGP 4.1.1 AND INSPECTION REPORTS SUBMITTED TO THE CITY OF DOVER, NH, ENGINEERING DEPARTMENT WITHIN 24 HOURS IN ACCORDANCE WITH CGP 4.1.7 AND MAINTAINED BY THE OWNER FOR A PERIOD OF THREE YEARS AFTER THE NOTICE OF TERMINATION (NOT) IS SUBMITTED. SEE ALSO CITY OF DOVER ADDITIONAL INSPECTION REQUIREMENTS BELOW.

13.) PER EPA CGP Z.1.2.2 (INSTALL PERIMETER CONTROL), "YOU MUST INSTALL SEDIMENT CONTROLS ALONG THOSE PERIMETER AREAS OF YOUR SITE THAT WILL RECEIVE STORMWATER FROM EARTH DISTURBING ACTIVITIES." AS A RESULT OF SWPPP INSPECTIONS, THE CONTRACTOR MAY HAVE TO EXPAND PERIMETER CONTROLS TO MEET THIS REQUIREMENT. THE E&SC PLAN IS INITIAL GUIDANCE AS TO THE ANTICIPATED REQUIREMENTS AND IT THE CONTRACTORS RESPONSIBILITY TO ENSURE THAT STORMWATER VIOLATION DO NOT OCCUR.

14.) CITY OF DOVER: IN ACCORDANCE WITH SITE PLAN REVIEW REGULATIONS (149-14) THE FOLLOWING STORMWATER MEASURES ARE REQUIRED. THIS SITE DEVELOPMENT QUALIFIES AS A REDEVELOPMNET PROJECT. THE EXISTING IMPERVIOUS AREA IS 73.7% AND PROPOSED IMPERVIOUS AREA IS 69.1%. THE CONTIGUOUS LAND DISTURBANCE IS 16,855 SQUARE FEET.

A.) ALL PROPOSED BMSs WILL CONFORM TO THE NH STORMWATER MANUAL VOLUME 3.
B.) EROSION AND SEDIMENT CONTROL MEASURES SHALL BE INSTALLED PRIOR TO ANY SOIL LAND DISTURBANCE AND MUST BE REVIEWED AND APPROVED BY COMMUNITY SERVICE.
C.) TEMPORARY STABILIZATION MEASURES SHOULD BE IN PLACE WITHIN SEVEN CALENDAR DAYS FOR EXPOSED SOILS AREAS THAT ARE WITHIN ONN HUNDER FEET OF A SURFACE WATER BODY OR A WETLAND AND NO MORE THAN 14 CALENDAR DAYS FOR ALL OTHER AREAS. PERMANENT STABILIZTAION SHOULD BE IN PLACE WITHIN THREE CALENDAR DAYS FOLLOWING COMPLETION OF FINAL GRADING OF EXPOSED SOKL AREAS.
D.) ALL TEMPORARY EROSION AND SEDIMENT CONTROL MEASURES SHALL BE MAINTAINED IN FUNCTIONING CONDITION UNTIL FINAL STABILIZATION IS ACCOMPLISHED.
E.) COMMUNITY SERVICES DEPARTMENT OR THEIR DESIGNATED AGENT SHALL HAVE ACCESS TO THE SITE TO COMPLETE ROUTINE INSPECTIONS AND SHALL BE NOTIFIED 24-HOURS PRIOR TO INSTALLATION OF A STORMWATER BMP IN ORDER TO SCHEDULE AN INSPECTION, DURING NORMAL WORKING HOURS.
F.) THE PLANNING BOARD OR COMMUNITY SERVICES MAY REQUIRE THE DESIGN ENGINEER AND/OR AN INDEPENDENT, THIRD-PARTY INSPECTION AND OVERSIGHT OF THE CONSTRUCTION OF STORMWATER MANAGEMENT FACILITIES AND EROSION AND SEDIMENT CONTROL AT THEIR DISCRETION. THE OWNER / APPLICANT IS RESPONSIBLE FOR ALL FEES ASSOCIATED WITH INSPECTIONS.
G.) ALL SWPPP INSPECTIONS MUST BE CONDUCTED BY A QUALIFIED PROFESSIONAL SUCH AS A PROFESSIONAL ENGINEER (PE), A CERTIFIED PROFESSIONAL IN EROSION AND SEDIMENT CONTROL (CPESC), A CERTIFIED EROSION SEDIMENT AND STORMWATER INSPECTOR (CESSWI), OR A CERTIFIED PROFESSIONAL IN STORMWATER QUALITY (CPSWQ). INSPECTION REPORTS WILL BE SUBMITTED TO THE COMMUNITY SERVICES DEPARTMENT.

***LEGEND:***

- IRON PIPE (FND)
- IRON BOUND (FND)
- REBAR (FND)
- UTILITY POLE
- 12" FILTREXX SILTSOXX / ORANGE CONSTRUCTION FENCE
- TREE LINE
- CHECK DAM

***SOILS & DEWATERING:***

*SfC* – SUFFIELD SILT LOAM, 8 TO 15 PERCENT SLOPES, ASSUMED DISTURBED: K=0.43

SEE WEBSOIL USDA-NRCS
ERODIBILITY FACTOR – K, CPESC MANUAL, ENVIROCERT INTERNATIONAL INC.

THE SOIL ERODIBILITY FACTOR (K) OF THE SOIL IS RELATIVELY HIGH (K=.43). CONTRACTOR TO BE AWARE OF THE SOIL PROFILES AND ENSURE THAT PROPER EROSION PREVENTION AND SEDIMENT CONTROL MEASURES ARE TAKEN AT ALL TIMES. ANY DEWATERING REQUIREMENTS IN NEW HAMPSHIRE REQUIRE SPECIAL PROVISIONS IN ACCORDANCE WITH THE "CLARIFICATION OF SECTION 9.1.2 (STATE OF NEW HAMPSHIRE CONDITIONS) AND OTHER NH SPECIFIC INFORMATION FOR THE U.S. EPA 2012 NPDES CONSTRUCTION GENERAL PERMIT (CGP)" DATED MAY 3, 2012 INCLUDED IN THE SWPPP.

COVER MANAGEMENT DURING CONSTRUCTION FOR EXPOSED SOIL WILL INCLUDE HAY / STRAW APPLIED AT A RATE OF 2.0 TONS PER ACRE, TEMPORARY SEEDING OF ANNUAL RYE GRASS, AND PERMANENT SEEDING AT THE EARLIES OPPORTUNITY. SEE ADDITIONAL REQUIREMENT FOR STABILIZATION ON THE EROSION AND SEDIMENT CONTROL DETAIL SHEETS, E-101 AND E-102.

THE CONSTRUCTION SCHEDULE WILL BE MANAGED SO THAT ALL STORMWATER STRUCTURES WILL BE BUILT AND STABILIZED PRIOR TO RECEIVING SURFACE WATER RUNOFF. CONTRACTOR TO BE RESPONSIBLE FOR ALL DIVERSIONS DURING CONSTRUCTION AND FOR INTERIM SEDIMENT AND EROSION CONTROL MEASURES.

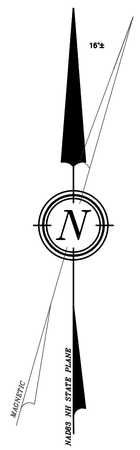


GRAPHIC SCALE

20 0 10 20 40 80

( IN FEET )
1 inch = 20 ft.

DOVER PLANNING #16-31C

| REVISION | DATE | DESCRIPTION |
|---|---|---|
| #3 | 4-27-18 | REVISE PER ABUTTER COMMENT |
| #2 | 3-27-18 | REVISED PER ZONING CHANGE |
| #1 | 2-19-18 | REVISED PER TRC COMMENTS |

EROSION AND SEDIMENT CONTROL PLAN
FOR
6 GROVE STREET RESIDENCES, LLC
FOR PROPERTY LOCATED AT
6 GROVE STREET, DOVER NH
***TAX MAP 31 LOT 14***

BERRY & SURVEYING ENGINEERING
335 SECOND CROWN POINT ROAD
BARRINGTON, NH 03825 (603)332-2863

SCALE : 1 IN. EQUALS 20 FT.
DATE : JANUARY 18, 2018
FILE NO. : DB 2016 – 090

STATE OF NEW HAMPSHIRE
KENNETH A. BERRY
No. 3434
LICENSED
PROFESSIONAL ENGINEER

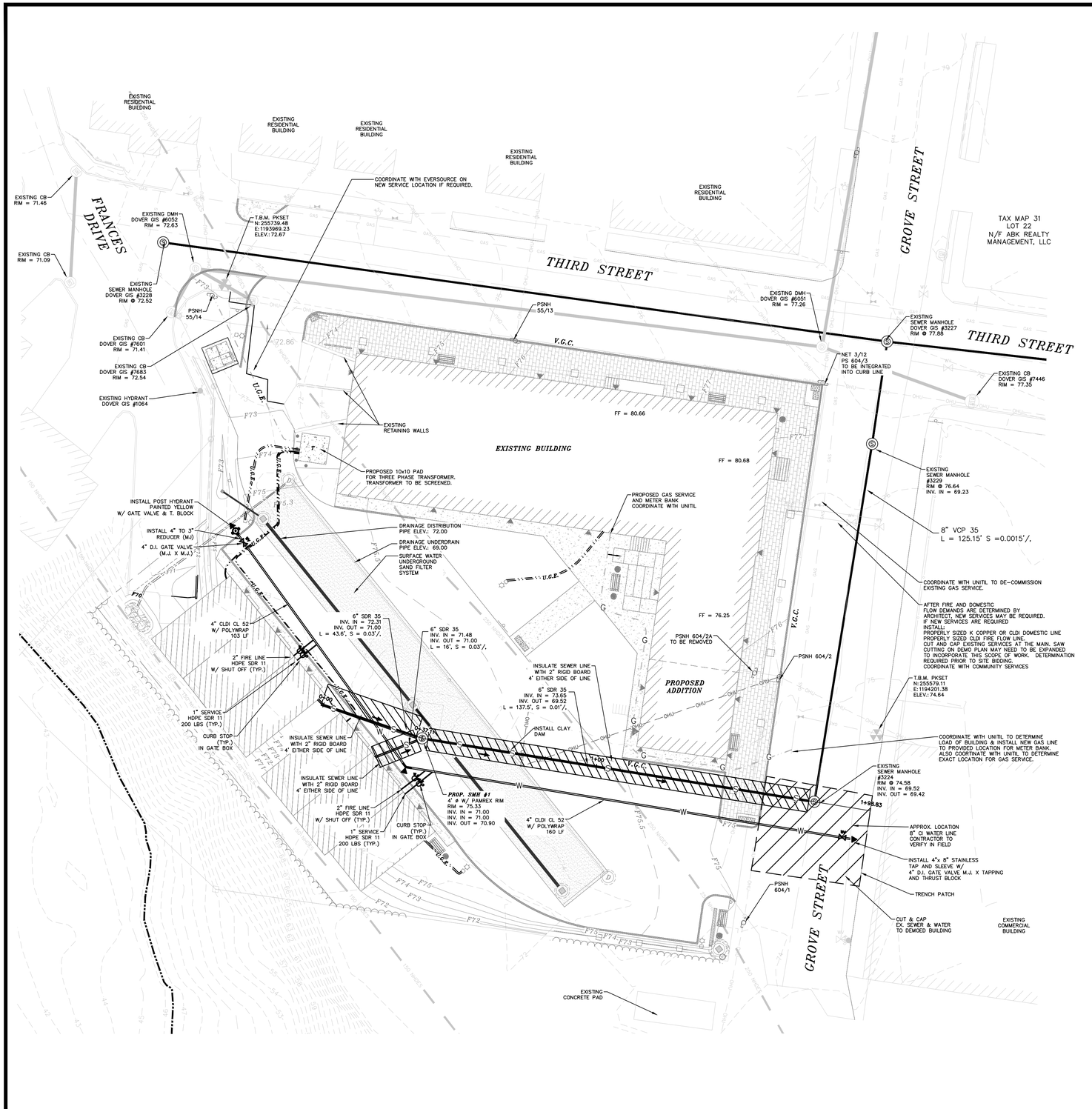


*NOTES:*

1.) THE PURPOSE OF THIS PLAN IS TO DEMONSTRATE THE OVERVIEW PUBLIC UTILITIES WITHIN THE SITEPLAN.

2.) UNDERGROUND UTILITY LOCATIONS ARE BASED UPON BEST AVAILABLE EVIDENCE AND ARE NOT FIELD VERIFIED. LOCATING AND PROTECTING ANY ABOVE AND BELOW GROUND UTILITIES IS THE SOLE RESPONSIBILITY OF THE CONTRACTOR. ANY UTILITY CONFLICTS SHOULD BE REPORTED IMMEDIATELY TO THE DESIGN ENGINEER.

3.) THE CONTRACTOR SHALL CALL AND COORDINATE WITH DIGSAFE 1-888-344-7233 AT LEAST 72 HOURS PRIOR TO COMMENCING ANY EXCAVATION ON PUBLIC OR PRIVATE PROPERTY.

4.) PROTECTION OF SUBGRADE: THE CONTRACTOR SHALL BE REQUIRED TO MAINTAIN STABLE, DEWATERED SUBGRADES, TRENCHES, AND OTHER AREAS DURING CONSTRUCTION. SUBGRADE DISTURBANCE MAY BE INFLUENCED BY EXCAVATION METHODS, MOISTURE, PRECIPITATION, GROUNDWATER CONTROL, AND CONSTRUCTION ACTIVITIES. THE CONTRACTOR SHALL TAKE PRECAUTIONS TO PREVENT SUBGRADE DISTURBANCE. SUCH PRECAUTIONS MAY INCLUDE DIVERTING STORMWATER RUNOFF AWAY FROM CONSTRUCTION AREAS, REDUCING TRAFFIC IN SENSITIVE AREAS, AND MAINTAINING AN EFFECTIVE DEWATERING PROGRAM. SOILS EXHIBITING HEAVING OR INSTABILITY SHALL BE OVER EXCAVATED TO MORE COMPETENT BEARING SOIL AND REPLACED WITH FREE DRAINING STRUCTURAL FILL MEETING THE ENGINEERS SPECIFIC RECOMMENDED CRITERIA.

5.) IF THE EARTHWORK IS PERFORMED DURING FREEZING WEATHER (NOT ALLOWED IN CITY R.O.W.), EXPOSED SUBGRADES ARE SUSCEPTIBLE TO FROST. NO FILL OR UTILITIES SHALL BE PLACED ON FROZEN GROUND. THIS WILL LIKELY REQUIRE REMOVAL OF A FROZEN SOIL CRUST AT THE COMMENCEMENT OF EACH DAY'S OPERATION. THE FINAL SUBGRADE ELEVATION WOULD ALSO REQUIRE AN APPROPRIATE DEGREE OF INSULATION AGAINST FREEZING.

6.) PLACEMENT OF BORROW MATERIALS SHALL BE PERFORMED IN A MANNER THAT PREVENTS LONG TERM DIFFERENTIAL SETTLEMENT. EXCESSIVELY WET MATERIALS SHALL BE STOCKPILED AND ALLOWED TO DRAIN BEFORE PLACEMENT. FROZEN MATERIAL SHALL NOT BE USED FOR CONSTRUCTION. VOIDS BETWEEN STONES AND CLUMPS OF MATERIAL SHALL BE FILLED WITH FINE MATERIALS.

7.) FINAL UTILITY LOCATIONS TO BE COORDINATED BETWEEN THE CONTRACTOR, ALL APPROPRIATE UTILITY COMPANIES AND THE DOVER DPW.

8.) CONTRACTOR TO CONTACT DOVER DPW A MINIMUM OF TWO WEEKS PRIOR TO ANY CONSTRUCTION TO COORDINATE ALL WORK CONCERNING INSTALLATION OF ANY PROPOSED WATER LINE IMPROVEMENTS.

9.) ALL WATER MAIN AND SERVICE INSTALLATIONS SHALL CONFORM TO CITY OF DOVER STANDARDS. ALL HIGHWAY CONSTRUCTION WILL MEET THE CITY OF DOVER STANDARDS AS MODIFIED BY WAIVER REQUEST AT THE PLANNING BOARD.

10.) CONTRACTOR SHALL COORDINATE ALL ELECTRICAL INSTALLATIONS WITH EVERSOURCE AT (800) 662-7764. ALL ELECTRIC CONDUIT INSTALLATION SHALL BE INSPECTED BY EVERSOURCE PRIOR TO BACKFILL. A 48-HOUR MINIMUM NOTICE IS REQUIRED.

11.) ALL SEWER INSTALLATIONS SHALL CONFORM TO THE REQUIREMENTS OF NHDES & DOVER DPW SEWER DIVISION STANDARDS.

12.) CONTRACTOR SHALL COORDINATE ALL TELECOMMUNICATIONS INSTALLATIONS WITH FAIRPOINT COMMUNICATIONS AT (603) 427-5525.

13.) CONTRACTOR SHALL COORDINATE ALL CABLE INSTALLATIONS WITH COMCAST.

14.) ALL SEWER MAN HOLE RIMS & COVERS ARE TO BE PAMREX.

15.) ALL WATER SERVICES ARE TO BE WITNESSED WITH A 2"X4" PAINTED BLUE. ALL SEWER SERVICES ARE TO BE WITNESSED WITH A 2"X4" PAINTED YELLOW, IS STUBBED PRIOR TO BUILDING CONSTRUCTION.

16.) THE EXISTING SEWER SERVICE LOCATION, SIZE AND TYPE IS UNKNOWN AT THIS TIME. IF A NEW SERVICE IS DETERMINED TO BE REQUIRED IT WILL BE A 6" SDR 35 PIPE FROM THE BUILDING TO THE SEWER MAIN IN THE STREET ON GROVE STREET. TYPICAL SEWER CONSTRUCTION DETAILS ARE PROVIDED ON U101 WITHIN THE PLAN SET IF REQUIRED. COORDINATE WITH DPW. THE SAW CUTTING PROVIDED ON THE DEMO PLAN MAY NEED TO BE EXPANDED AS PART OF THIS CONSTRUCTION. DETERMINATION IS TO BE MADE PRIOR TO BIDDING.

DOVER PLANNING #16-31C

| REVISION | DATE | DESCRIPTION |
|---|---|---|
| #3 | 4-27-18 | REVISE PER ABUTTER COMMENT |
| #2 | 3-27-18 | REVISED PER ZONING CHANGE |
| #1 | 2-19-18 | REVISED PER TRC COMMENTS |

UTILITY PLAN
FOR
6 GROVE STREET RESIDENCES, LLC
FOR PROPERTY LOCATED AT
6 GROVE STREET, DOVER NH
***TAX MAP 31 LOT 14***

BERRY SURVEYING & ENGINEERING
335 SECOND CROWN POINT ROAD
BARRINGTON, NH 03825 (603)332-2863

SCALE : 1 IN. EQUALS 20 FT.
DATE : JANUARY 18, 2018
FILE NO. : DB 2016 - 090

STATE OF NEW HAMPSHIRE
KENNETH A. BERRY
No. 14246
LICENSED
PROFESSIONAL ENGINEER

*NOTES:*

1.) THE INTENT OF THIS PLAN SET IS TO DEMONSTRATE THE UTILITY DESIGN OF THE SITE AT 6 GROVE STREET.

2.) CURRENT OWNER: 6 GROVE STREET RESIDENCES, LLC
35 THIRD STREET
DOVER, NH 03820

3.) APPLICANT: 6 GROVE STREET RESIDENCES, LLC
35 THIRD STREET
DOVER, NH 03820

4.) TAX MAP 31, LOT 14 OF THE CITY OF DOVER TAX ASSESSOR'S MAPS.

5.) THE PURPOSE OF THIS PLAN IS TO DEMONSTRATE THE OVERVIEW AND PROFILE OF PROPSED PUBLIC UTILITIES WITHIN THE SITEPLAN.

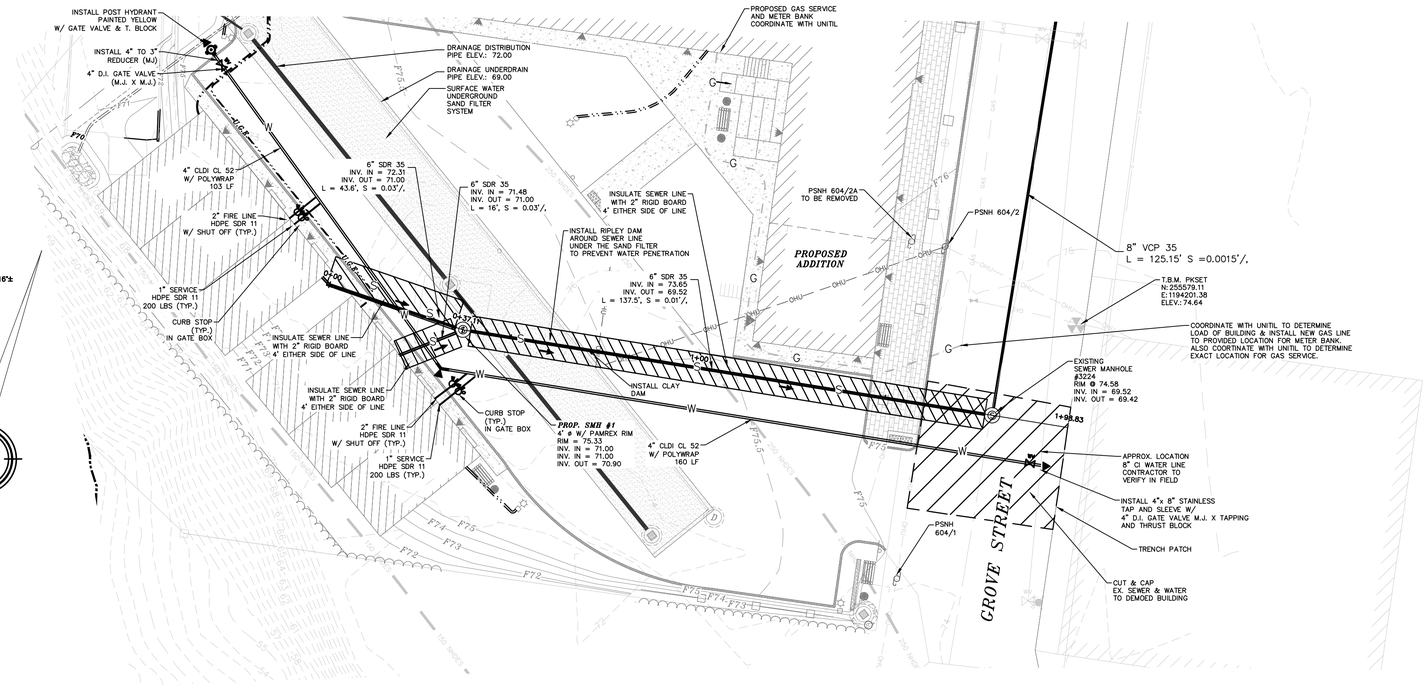


GRAPHIC SCALE

20 0 10 20 40 80

( IN FEET )
1 inch = 20 ft.

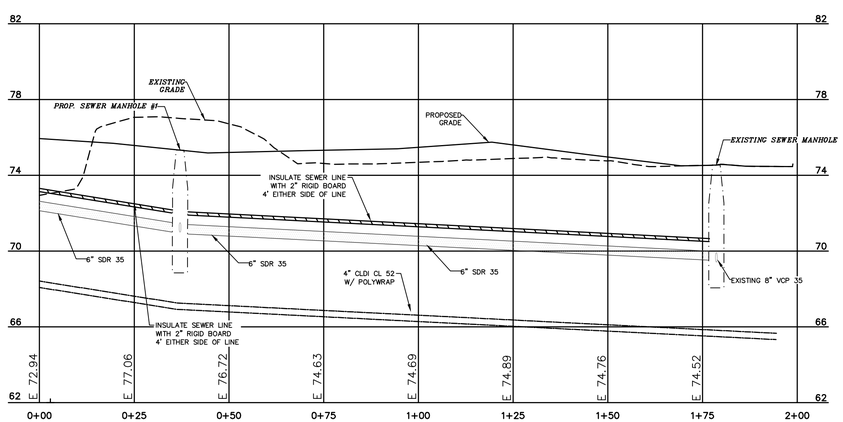


GRAPHIC SCALE

20 0 10 20 40 80

( IN FEET )
1 inch = 20 ft.

*VERTICAL SCALE: 1" = 4'*

DOVER PLANNING #16-31C

| REVISION | DATE | DESCRIPTION |
|---|---|---|
| #3 | 4-27-18 | REVISE PER ABUTTER COMMENT |
| #2 | 3-27-18 | REVISED PER ZONING CHANGE |
| #1 | 2-19-18 | REVISED PER TRC COMMENTS |

UTILITY PROFILE PLAN
FOR
6 GROVE STREET RESIDENCES, LLC
FOR PROPERTY LOCATED AT
6 GROVE STREET, DOVER NH
***TAX MAP 31 LOT 14***


BERRY SURVEYING & ENGINEERING
335 SECOND CROWN POINT ROAD
BARRINGTON, NH 03825 (603)332-2863


SCALE : 1 IN. EQUALS 20 FT.
DATE : JANUARY 18, 2018
FILE NO. : DB 2016 - 090

STATE OF NEW HAMPSHIRE
KENNETH A. BERRY
No. 14241
LICENSED
PROFESSIONAL ENGINEER

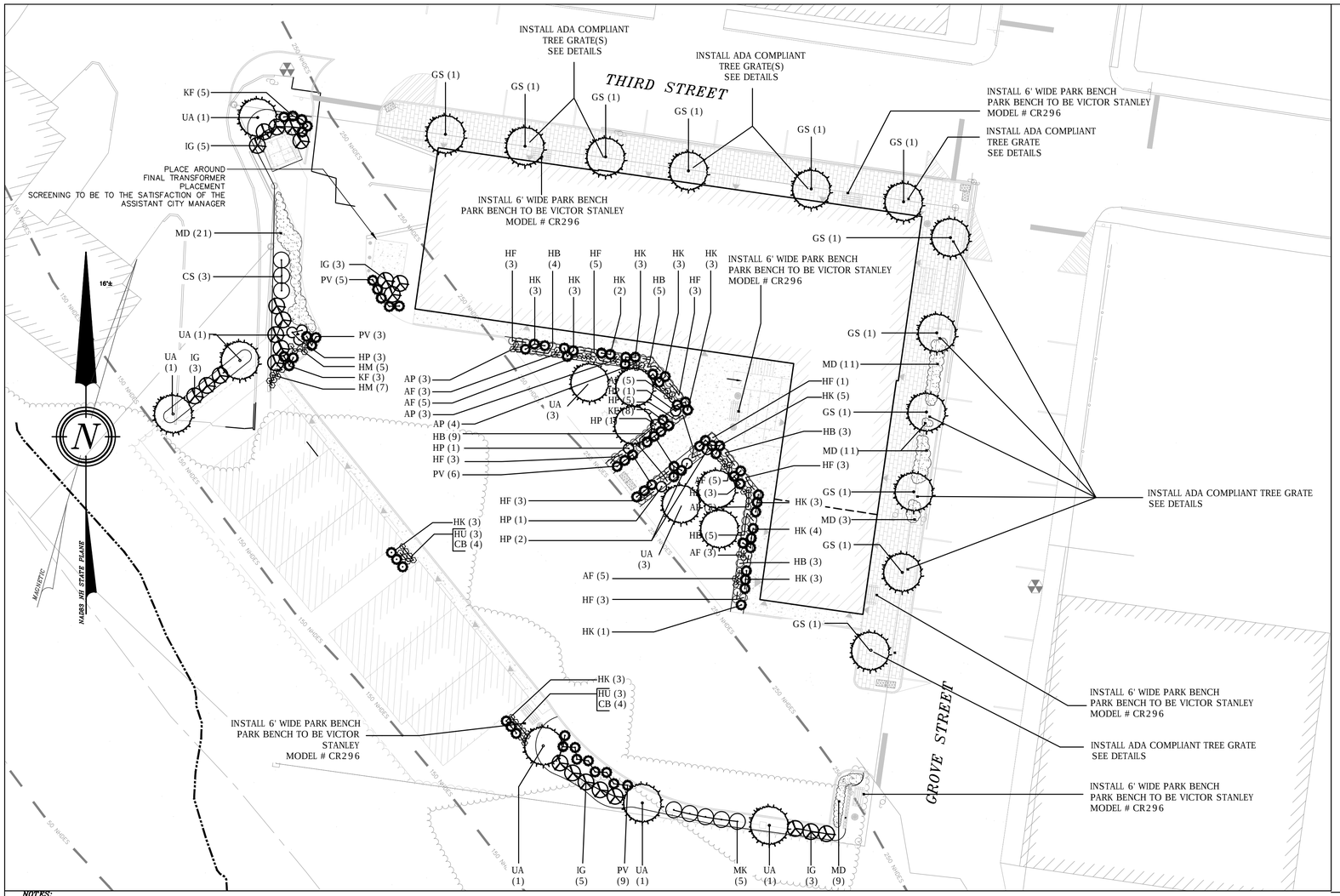


PLANTING NOTES

1. CONTRACTOR SHALL OBTAIN APPROVAL FROM L.A. PRIOR TO PURCHASING &/OR INSTALLING SUBSTITUTE PLANT MATERIAL PRIOR TO PURCHASE OF ANY SUBSTITUTE MATERIALS.

2. CONSTRUCTION ACCESS WILL BE AS DIRECTED BY L.A. CONTRACTOR IS RESPONSIBLE FOR RESTORATION OF ACCESS ROUTE AND ALL AREAS DISTURBED BY PLANTING OPERATIONS UPON COMPLETION OF CONSTRUCTION OPERATIONS, AT NO ADDITIONAL COST TO THE OWNER.

3. LAYOUT OF ALL PLANTING BEDS AND LOCATION OF PLANTS TO BE APPROVED BY L.A. ON SITE PRIOR TO CONSTRUCTION AND INSTALLATION.

4. CONTRACTOR TO REMOVE ALL DEBRIS GENERATED BY PLANT INSTALLATION. DEBRIS TO BE DISPOSED OF IN A LEGAL MANNER.

5. ALL PLANT MATERIAL SHALL BE GUARANTEED TO BE IN GOOD, HEALTHY & FLOURISHING CONDITION FOR ONE YEAR FROM THE DATE OF FINAL INSTALLATION APPROVAL BY L.A. CONTRACTOR SHALL REPLACE, WITHOUT COST TO OWNER, AND AS SOON AS WEATHER CONDITIONS PERMIT, ALL DEAD AND NON-FLOURISHING PLANTS AS DETERMINED BY THE L.A. REPLACEMENT PLANTS SHALL BE BE GUARANTEED IDENTICALLY TO ORIGINAL PLANTS, TIME PERIOD COMMENCING FROM DATE OF REPLACEMENT PLANTING APPROVAL BY L.A.

6. ALL BEDS TO BE MULCHED WITH 3" DEPTH SHREDDED BARK MULCH UNLESS NOTED OTHERWISE.

7. CONTRACTOR TO PROVIDE NECESSARY TEMPORARY IRRIGATION IF NEEDED BASED ON TIME OF YEAR THE PROJECT IS IMPLEMENTED.

8. ALL PLANT MATERIAL TO COMPLY WITH THE CITY OF DOVER'S SITE REVIEW REGULATIONS, 149-14(G), SUCH THAT THERE SHALL BE DECIDUOUS SHADE TREES PLANTED 40 FEET O.C. ALONG THE PERIMTERE OF THE PARKING LOTS AND SHRUBS PLANTED 5 FEET O.C. WITHIN THE PERIMETER BUFFER. SEE PLANT LIST FOR SPECIES AND SIZE OF PLANTS.

TEMPORARY WATERING NOTES

1. CONTRACTOR IS RESPONSIBLE FOR MAKING SURE ALL PLANT MATERIAL HAS ADEQUATE WATER DURING THE ESTABLISHMENT PERIOD.

2. THE USE OF GATOR BAGS, SOAKER HOSE, HAND WATERING AND OTHER TECHNIQUES SHOULD BE USED TO ASSURE PROPER HYDRATION OF THE PLANTINGS IS MAINTAINED.

3. TEMPORARY IRRIGATION SYSTEMS CAN BE SET UP TO ASSIST IN WATERING ACTIVITIES.

**Plant List**
**Grove St. Dover, NH**

| Botanical Name / Common Name | Size | Qty. | Label |
|---|---|---|---|
| **Trees** | | | |
| *Gleditsia 'Shademaster'* / Shademaster Honeylocust | 2.5-3" C | 12 | GS |
| *Ulmus americana 'Princeton'* / Princeton American Elm | 2.5-3" C | 12 | UA |
| **Shrubs** | | | |
| *Cornus sanguinea 'Winter Flame'* / Winter Flame Dogwood | #3 | 3 | CS |
| *Hydrangea paniculata 'Little Lime'* / Little Lime Panicle Hydrangea | #3 | 9 | HP |
| *Ilex glabra 'Compacta'* / Compact Inkberry | #3 | 24 | IG |
| *Syringa patula 'Miss Kim'* / Miss Kim Lilac | #3 | 5 | MK |
| **Grasses** | | | |
| *Calamagrostis a. 'Karl Foerster'* / Karl Foerster Feather Reed Grass | #2 | 16 | KF |
| *Panicum virgatum 'Ruby Ribbons'* / Ruby Ribbons Switchgrass | #2 | 23 | PV |
| *Hakonechloa macra 'All Gold'* / All Gold Japenese Forest Grass | #2 | 34 | HK |
| **Perennials** | | | |
| *Huechra 'Citronelle'* / Citonelle Coral Bells | #1 | 6 | HU |
| *Huechra 'Licorice* / Licorice Coral Bells | #1 | 8 | CB |
| *Hemerocallis 'Pardon Me'* / Pardon Me Daylily | #1 | 12 | HM |
| *Astilbe 'Visions in Pink'* /Visions in Pink Astilbe | #1 | 15 | AP |
| *Astilbe 'Bridal Veil'* / White Astilbe | #1 | 26 | AF |
| *Hosta 'Blue Cadet'*/ Blue Cadet Plantain Lily | #1 | 29 | HB |
| *Hosta 'First Frost'* / First Frost Plantain Lily | #1 | 29 | HF |
| **Ground Cover** | | | |
| *Microbiota decussata* / Russian Cypress | #1 | 55 | MD |


terrain
planning & design llc
311 kast hill road
hopkinton, nh 03229
603. 491. 2322
terrainplanning.com


GROVE STREET

Site Location:
6 Grove Street
Dover, NH
Tax Map: 31

Prepared For:
Berry Surveying & Engineering
335 Second Crown Point Rd
Barrington, NH 03825

LANDSCAPE PLAN

DATE: 10-14-16

SCALE: 1" = 20'

PROJECT #: 1677

Drawn By: LAW
Revised By: BG

Checked By: ERB

| REVISIONS: | DATE: |
|---|---|
| Issued for Client Review | 04-06-16 |
| Revised | 10-14-16 |
| | 12-06-17 |
| | 2-19-18 |


This plan is the property of Terrain Planning & Design LLC. Use or reproduction of this plan by any means without permission or purchase from Terrain Planning & Design LLC is prohibited.


L - 01

N

SHEET 11 OF 21

LICENSED LANDSCAPE ARCHITECT
ERIC R. BUCK
078
STATE OF NEW HAMPSHIRE

*NOTES:*

1. CALL DIG SAFE PRIOR TO BEGINNING WORK. (1-888-344-7233). THE LANDSCAPE CONTRACTOR IS ADVISED OF THE PRESENCE OF UNDERGROUND UTILITIES AND SHALL VERIFY THE EXISTENCE AND LOCATION OF THE SAME BEFORE COMMENCING AND DIGGING OPERATIONS. THE LANDSCAPE CONTRACTOR SHALL REPLACE OR REPAIR UTILITIES, PAVING, WALKS, CURBING, ETC DAMAGED IN PERFORMANCE OF THIS JOB AT NO ADDITIONAL COST TO THE OWNER OR GENERAL CONTRACTOR.
2. CONTRACTOR SHALL THOROUGHLY FAMILIARIZE THEMSELVES WITH ALL SITE CONDITIONS PRIOR TO CONSTRUCTION BIDDING.
3. THE CONTRACTOR SHALL SUPPLY ALL PLANT MATERIALS IN QUANTITIES SUFFICIENT TO COMPLETE THE PLANTINGS SHOWN ON THE DRAWINGS. VARIATIONS IN QUANTITIES ARE TO BE APPROVED BY THE DESIGN ENGINEER.
4. PROVIDED SMOOTH TRANSITION WHERE NEW WORK MEETS EXISTING CONDITIONS.
5. ALL PLANT MATERIAL INSTALLED SHALL MEET THE SPECIFICATIONS OF "AMERICAN STANDARD FOR NURSERY STOCK" BY THE AMERICAN ASSOCIATION OF NURSERYMEN
6. ALL PLANT MATERIALS SHALL BE FREE FROM INSECTS AND DISEASE.
7. ALL PLANTINGS SHALL BE DONE IN ACCORDANCE WITH ACCEPTABLE HORTICULTURAL PRACTICES. THIS IS TO INCLUDE PROPER PLANTING MIX, PLANT BED AND TREE PIT PREPARATION, PRUNING STAKING OR GUYING, WRAPPING, SPRAYING, FERTILIZATION, PLANTING AND ADEQUATE MAINTENANCE UNTIL ACCEPTANCE FROM OWNER.
8. ALL GRASS, OTHER VEGETATION AND DEBRIS SHALL BE REMOVED FROM ALL PLANTING AREAS PRIOR TO PLANTING.
9. THE GENERAL CONTRACTOR SHALL BE RESPONSIBLE FOR THE PROTECTION OF EXISTING AND NEWLY PLANTED TREES AND SHRUBS DURING THE CONSTRUCTION PROCESS. WHERE REQUIRED, THE CONTRACTOR SHALL INSTALL TEMPORARY FENCING (SNOW OR EQUAL) AROUND EXISTING TREES AND SHRUBS THAT COULD BE IMPACTED BY THE CONSTRUCTION PROCESS. STORAGE OF CONSTRUCTION EQUIPMENT, CONSTRUCTION MATERIALS, SNOW STORAGE AND OR VEHICLE PARKING SHALL NOT BE PERMITTED WITHIN THE DRIP LINE OF TREES OR TWENTY FEET WHICH EVER IS GREATER.
10. NEW PLANTINGS SHALL BE INSTALLED PER PROJECT DRAWINGS AND SPECIFICATION THAT INCLUDE FERTILIZATION AND MULCHING AS REQUIRED.
11. ALL SHRUB BEDS AND TREE PITS SHALL BE MULCHED WITH 3" CLEAN SHREDDED BLACK MULCH
12. WHERE INDICATED ON PLAN, PLANTING SOIL MIXTURE FOR GROUND COVER AND PERENNIAL BED AREAS SHALL CONSIST OF FOUR PARTS TOPSOIL, TWO PARTS SPHAGNUM PEAT MOSS, AND ONE PART HORTICULTURAL PERLITE BY VOLUME. PEAT MOSS MAY BE SUBSTITUTED WITH WELL-ROTTED OR DEHYDRATED MANURE OR COMPOST. ROTOTILL BEDS TO A DEPTH OF 8 INCHES.
13. MAINTENANCE OF NEW PLANTINGS AND LAWNS SHALL BE THE RESPONSIBILITY OF THE GENERAL CONTRACTOR AND OR LANDSCAPE SUBCONTRACTOR UNTIL ACCEPTANCE BY THE OWNER. RESPONSIBILITIES SHALL INCLUDE WATERING WEEDING AND MOWING AS NECESSARY. ALL PLANT MATERIAL SHALL BE GUARANTEED FOR A PERIOD OF ONE YEAR FROM THE DATE OF ACCEPTANCE, REPLACEMENT MATERIAL SHALL BE GUARANTEED FOR AND ADDITIONAL YEAR FROM TIME OF INSTALLATION.
14. THE GENERAL CONTRACTOR SHALL BE RESPONSIBLE FOR MAINTAINING ALL TEMPORARY EROSION CONTROL MEASURES DURING THE CONSTRUCTION PHASE AND UNTIL ALL AREAS HAVE BEEN STABILIZED AND ACCEPTED BY THE OWNER. THE GENERAL CONTRACTOR SHALL PROVIDE WEEKLY INSPECTIONS OF EROSION MEASURE AND IMMEDIATELY AFTER STORM EVENTS AND REPAIR AS NECESSARY.
15. THE GENERAL CONTRACTOR AND OR THE LANDSCAPE SUBCONTRACTOR SHALL BE RESPONSIBLE FOR THE REMOVAL OF ALL THREE GUYING MATERIAL ONCE PLANT MATERIAL HAS BEEN ESTABLISHED. (MINIMUM OF ONE GROWING SEASON). ALL TEMPORARY EROSION CONTROL MEASURE SHALL BE REMOVED ONCE STABILIZATION OF DISTURBANCE HAS BEEN ACCEPTED BY OWNER.
16. THE GENERAL CONTRACTOR SHALL BE RESPONSIBLE FOR A MINIMUM OF TWO MOWINGS FOR ALL TURF AREAS OR UNTIL ACCEPTANCE BY THE OWNER. A MINIMUM UNIFORM 75% CATCH OF TURF IS REQUIRED FOR ACCEPTANCE.
17. ALL PLANTINGS SHALL BE WATERED REGULARLY DURING THEIR FIRST YEAR AND MAINTAINED PERMANENTLY IN GOOD GROWING CONDITION AS AN EFFECTIVE VISUAL SCREEN.
18. SHRUBS OR TREES WHICH DIE SHALL BE REPLACED WITHIN ONE GROWING SEASON WITH NEW SHRUBS OR TREES TO ENSURE CONTINUED COMPLIANCE WITH APPLICABLE LANDSCAPING REQUIREMENTS.
19. ALL REQUIRED LANDSCAPING SHALL BE INSTALLED BEFORE OCCUPANCY, OR WITHIN SIX MONTHS IF OCCUPANCY OCCURS DURING WINTER CONDITIONS.
20. TREES ARE TO BE 6' TALL AT PLANTING.
21. ALL PLANT STOCK SHALL CONFORM TO ANSI Z260.1 – NURSERY STOCK, LATEST EDITIONS (AMERICAN ASSOCIATION OF NURSERYMEN, INC.)
22. 4" AGED PINEBARK MULCH AND A WEED BARRIER (TY-PAR FABRIC OR APPROVED EQUAL) SHALL BE APPLIED TO ALL SHRUB AND GROUND COVER BEDS. INSTALL WEED BARRIER AS PER MANUFACTURERS RECOMMENDATIONS.
23. PLANT-PIT BACK-FILL SHALL BE MIXED AT A RATE OF 7 PARTS OF TOPSOIL TO 2 PARTS OF DEHYDRATED COW MANURE. SLOW RELEASE FERTILIZER SHALL BE APPLIED AS PER MANUFACTURERS RECOMMENDATIONS. USE EXISTING ON-SITE TOPSOIL AS PART OF BACK FILL WHEN AVAILABLE.
24. ALL LANDSCAPED AREAS NOT PLANTED WITH TREES, SHRUBS OR GROUNDCOVER SHALL BE RESTORED WITH SEED OR SOD AS INDICATED ON PLANS.
25. TOPSOIL WILL BE TESTED FOR FERTILIZATION REQUIREMENTS, AND SLOW RELEASE ENVIRONMENTALLY FRIENDLY FERTILIZER WILL BE APPLIED AT THE RECOMMENDED RATES.
26. ALL DISTURBED WETLAND BUFFER AREAS, EXCEPT FOR AREAS THAT ARE PART OF THE DRAINAGE SYSTEM, ARE TO BE RESEEDED WITH A CONSERVATION SEED MIX AND ONLY MOWED TWICE PER YEAR.
27. ALL PLANT SUBSTITUTIONS MUST BE APPROVED BY THE ENGINEER.
28. PLANTS SHALL BE SUBJECT TO INSPECTION AND APPROVAL AT THE PLACE OF GROWTH, UPON DELIVERY OR AT THE JOB SITE WHILE WORK IS ONGOING TO CONFORMITY TO SPECIFIED QUALITY, SIZE AND VARIETY.
29. PLANTS FURNISHED IN CONTAINERS SHALL HAVE THE ROOTS WELL ESTABLISHED IN THE SOIL MASS AND SHALL HAVE AT LEAST ONE (1) GROWING SEASON. ROOT-BOUND PLANTS OR INADEQUATELY SIZED CONTAINERS TO SUPPORT THE PLANT MAY BE DEEMED UNACCEPTABLE.
30. ALL PLANTS SHALL BE GUARANTEED BY THE CONTRACTOR FOR NO LESS THAN ONE FULL YEAR FROM THE TIME OF INSTALLATION. DURING THIS TIME, THE OWNER SHALL MAINTAIN ALL PLANT MATERIALS IN THE ABOVE MANNER. IT IS THE CONTRACTOR'S RESPONSIBILITY TO INSPECT THE PLANTS TO ENSURE PROPER CARE. IF THE CONTRACTOR IS DISSATISFIED WITH THE CARE GIVEN, HE SHALL IMMEDIATELY, AND IN SUFFICIENT TIME TO PERMIT THE CONDITION TO BE RECTIFIED, NOTIFY THE OWNER IN WRITING OR OTHERWISE FORFEIT HIS CLAIM.
31. BY THE END OF THE GUARANTEE PERIOD, THE CONTRACTOR SHALL HAVE REPLACED ANY PLANT MATERIAL THAT IS MISSING, NOT TRUE TO SIZE AS SPECIFIED, THAT HAS DIED, THAT HAS LOST NATURAL SHAPE DUE TO DEAD BRANCHES, EXCESS PRUNING OR INADEQUATE OR IMPROPER CARE, OR IS, IN THE OPINION OF THE OWNER, IN UNHEALTHY OR UNSIGHTLY CONDITION.
32. THE CONTRACTOR IS TO USE TEMPORARY MEASURES FOR WATERING PLANTS DURING THE ESTABLISHMENT PERIOD. INCLUDING CONNECTING TEMPORARY HOSES TO THE STRUCTURE WATER SUPPLY LINE AND UTILIZING SPRINKLERS UNTIL 85% GROWTH OCCURS.

0 10 20 40 60 100

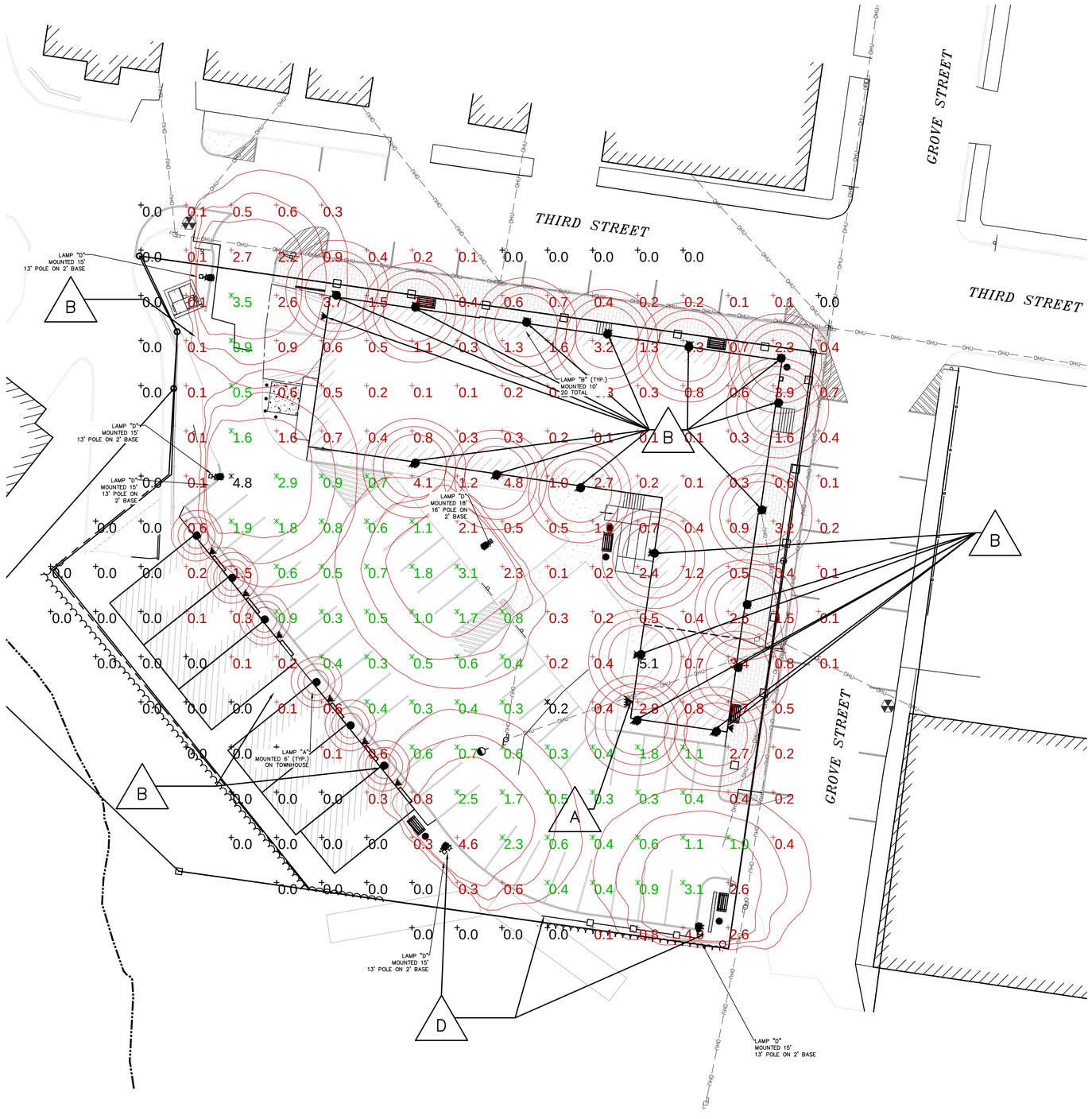


Schedule

| Symbol | Label | Quantity | Manufacturer | Catalog Number | Description | Lamp | Number Lamps | Filename | Lumens Per Lamp | Light Loss Factor | Wattage |
|---|---|---|---|---|---|---|---|---|---|---|---|
| | A | 6 | Lithonia Lighting | ODSL10 SRC | CRAFTSTON WALL MOUNTED SMALL DECORATIVE LANTERN, ONE LAMP 13W SPIRAL COMPACT FLUORESCENT, WHITE GLASS DIFFUSER 4.25" DIA. X 6.65" HIGH, ELECTRONIC BALLAST | ONE 13-WATT T4 SPIRAL COMPACT FLUORESCENT, VERTICAL BASE UP POSITION. | 1 | ODSL10_SRC.ies | 900 | 1 | 12.6 |
| | B | 17 | | WSTM LED 2A -40K 120 DIFS | WSTM LED WITH 2 BOARDS, 4000K CCT, 120 VOLT, DIFFUSE GLASS LENS | SAMSUNG 2323 | 1 | WSTM_LED_2A_40K_120_DIFS.ies | 1277 | 1 | 16.2 |
| | D | 5 | | KSF1 175M R4SC (PROBE) | Specification Area Luminaire, 175W Metal Halide, R4SC Sharp Cutoff Reflector, Full Cutoff MEETS THE 'NIGHTTIME FRIENDLY' CRITERIA | ONE 175-WATT CLEAR BT-28 METAL HALIDE, HORIZONTAL POSITION. | 1 | KSF1_175M_R4SC_(PROBE).ies | 12000 | 1 | 213 |

Statistics

| Description | Symbol | Avg | Max | Min | Max/Min | Avg/Min |
|---|---|---|---|---|---|---|
| Calc Zone #1 | + | 0.8 fc | 5.1 fc | 0.0 fc | N/A | N/A |
| Stat Zone # 1 | X | 1.0 fc | 4.8 fc | 0.2 fc | 24.0:1 | 5.0:1 |

GRAPHIC SCALE

20 0 10 20 40 80

( IN FEET )
1 inch = 20 ft.

DOVER PLANNING #16-31C

| REVISION | DATE | DESCRIPTION |
|---|---|---|
| #3 | 4-27-18 | REVISE PER ABUTTER COMMENT |
| #2 | 3-27-18 | REVISED PER ZONING CHANGE |
| #1 | 2-19-18 | REVISED PER TRC COMMENTS |

PROPOSED LIGHTING PLAN
FOR
6 GROVE STREET RESIDENCES, LLC
FOR PROPERTY LOCATED AT
6 GROVE STREET, DOVER NH
***TAX MAP 31 LOT 14***

BERRY SURVEYING & ENGINEERING
335 SECOND CROWN POINT ROAD
BARRINGTON, NH 03825 (603)332-2863

SCALE : 1 IN. EQUALS 20 FT.
DATE : JANUARY 18, 2018
FILE NO. : DB 2016 - 090

STATE OF NEW HAMPSHIRE
KENNETH A. BERRY
No. 3440
LICENSED
PROFESSIONAL ENGINEER

## E1

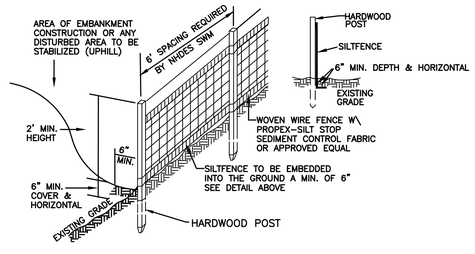


SILT FENCE CONSTRUCTION SPECIFICATIONS

1. WOVEN WIRE FENCE TO BE FASTENED SECURELY TO FENCE POSTS WITH WIRE TIES OR STAPLES AND FILTER CLOTH SHALL BE FASTENED TO WOVEN WIRE EVERY 24" AT TOP MID AND BOTTOM SECTIONS AND BE EMBEDDED INTO GROUND A MINIMUM OF 8" THE FENCE POSTS SHALL BE A MINIMUM 48" LONG, SPACED A MAXIMUM 10' APART, AND DRIVEN A MINIMUM OF 16" INTO THE GROUND.
2. WHEN TWO SECTIONS OF FILTER CLOTH ADJOIN EACH OTHER, THE ENDS OF THE FABRIC SHALL BE OVERLAPPED BY SIX INCHES, FOLDED AND STAPLED TO PREVENT SEDIMENT FROM BY-PASSING.
3. MAINTENANCE SHALL BE PERFORMED AS NEEDED AND SEDIMENT REMOVED WHEN "BULGES" DEVELOP IN THE SILT FENCE AND PROPERLY DISPOSED OF. SEE MAINTENANCE NOTE BELOW, REMOVAL OF SEDIMENT REQUIRED AT A DEPTH OF 6-INCHES.
4. PLACE THE ENDS OF THE SILT FENCE UP CONTOUR TO PROVIDE FOR SEDIMENT STORAGE.
5. SILT FENCES SHALL BE REMOVED WHEN NO LONGER NEEDED AND THE SEDIMENT COLLECTED SHALL BE DISPOSED AS DIRECTED BY THE ENGINEER.
6. THE AREA DISTURBED BY THE REMOVAL SHALL BE SMOOTHED AND RE-VEGETATED.
7. TO BE CONSTRUCTED IAW NH SWM #3 4-2 SEDIMENT CONTROL PRACTICES, SILT FENCE, PAGE 90.

SILT FENCE MAINTENANCE

1. SILT FENCES SHALL BE INSPECTED IMMEDIATELY AFTER EACH RAINFALL AND AT LEAST DAILY DURING PROLONGED RAINFALL. ANY REPAIRS THAT ARE REQUIRED SHALL BE MADE IMMEDIATELY.
2. IF THE FABRIC ON A SILT FENCE SHOULD DECOMPOSE OR BECOME INEFFECTIVE DURING THE EXPECTED LIFE OF THE FENCE, THE FABRIC SHALL BE REPLACED PROMPTLY.
3. SEDIMENT DEPOSITS SHOULD BE REMOVED WHEN THEY REACH SIX-INCHES IN DEPTH.
4. SEDIMENT DEPOSITS THAT ARE REMOVED OR LEFT IN PLACE AFTER THE FABRIC HAS BEEN REMOVED SHALL BE GRADED TO CONFORM WITH THE EXISTING TOPOGRAPHY AND VEGETATED.

*SILT FENCE DETAIL*
NOT TO SCALE

## E2

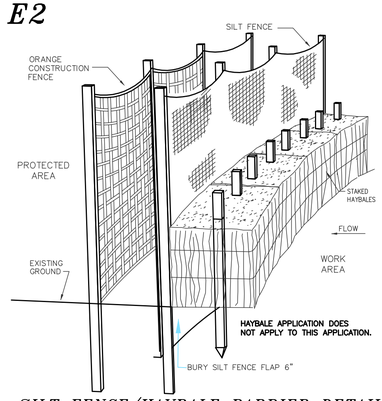


*SILT FENCE/HAYBALE BARRIER DETAIL*
THIS METHOD TO BE USED ALONG THE REAR OF THE PROPERTY
NOT TO SCALE

## E3

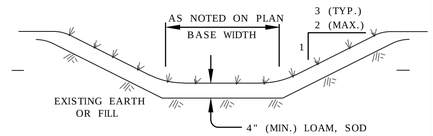


*GRASS TREATMENT SWALE*
NOT TO SCALE

INSPECT ANNUALLY FOR EROSION, SEDIMENT ACCUMULATIONS, VEGETATION LOSS, & INVASIVE SPECIES. REPAIR AS NECESSARY.

MOW GRASS ANNUALLY TO A DEPTH OF 4".

INSTALL STABILIZATION MATTING DURING CONSTRUCATION

TO BE CONSTRUCTED IAW NH SWM #2 CHAPTER 4, #5 TREATMENT SWALES, PAGE 123.

## E4

*CONSTRUCTION SAFETY FENCE*
NOT TO SCALE

LEGEND

| | |
|---|---|
| SAF12 | 48" ORANGE FENCE, 12 FEET O.C. |
| SAF11 | 48" ORANGE FENCE, 11 FEET O.C.. |
| SAF10 | 48" ORANGE FENCE, 10 FEET O.C. |
| SAF9 | 48" ORANGE FENCE, 9 FEET O.C. |
| SAF8 | 48" ORANGE FENCE, 8 FEET O.C.. |
| SAF7 | 48" ORANGE FENCE, 7 FEET O.C. |
| SAF6 | 48" ORANGE FENCE, 6 FEET O.C. |

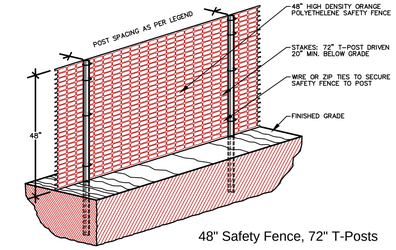


48" Safety Fence, 72" T-Posts

1. ALL SENSITIVE AREAS SHALL BE PROTECTED AS PER PLAN.
2. ALL TREES IN THE CONSTRUCTION AREA NOT SPECIFICALLY DESIGNATED FOR REMOVAL SHALL BE PRESERVED AND PROTECTED WITH HIGH VISIBILITY FENCE AS PER PLAN.
3. WHEN PRACTICABLE, INSTALL HIGH VISIBILITY 3 FEET OUTSIDE OF THE DRIP LINE OF THE TREE.
4. SAFETY FENCE SHOULD BE FASTENED SECURELY TO THE T-POSTS.
5. THE FENCING MUST REMAIN IN PLACE DURING ALL PHASES OF CONSTRUCTION; ANY CHANGE OF THE PROTECTIVE FENCING MUST BE APPROVED.

## E5

*STABILIZED CONSTRUCTION ENTRANCE*
NOT TO SCALE

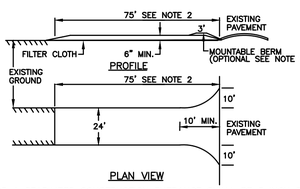


PLAN VIEW

1. STONE FOR A STABILIZED CONSTRUCTION ENTRANCE SHALL BE 3 INCH STONE, RECLAIMED STONE, OR RECYCLED CONCRETE EQUIVALENT.
2. THE LENGTH OF THE STABILIZED ENTRANCE SHALL NOT BE LESS THAN 75 FEET, EXCEPT THAT THE MINIMUM LENGTH MAY BE REDUCED TO 50 FEET IF A 3-INCH TO 6-INCH BERM IS INSTALLED AT THE ENTRANCE OF THE PROJECT SITE.
3. THE THICKNESS OF THE STONE FOR THE STABILIZED ENTRANCE SHALL NOT BE LESS THAN 6 INCHES.
4. THE WIDTH OF THE ENTRANCE SHALL NOT BE LESS THAN THE FULL WIDTH OF THE ENTRANCE WHERE INGRESS OR EGRESS OCCURS OR 10 FEET, WHICH EVER IS GREATER.
5. GEOTEXTILE FILTER CLOTH SHALL BE PLACED OVER THE ENTIRE AREA PRIOR TO PLACING
6. ALL SURFACE WATER THAT IS FLOWING TO OR DIVERTED TOWARD THE CONSTRUCTION ENTRANCE SHALL BE PIPED BENEATH THE ENTRANCE. IF PIPING IS IMPRACTICAL, A BERM WITH 5:1 SLOPES THAT CAN BE CROSSED BY VEHICLES MAY BE SUBSTITUTED FOR THE PIPE.
7. THE ENTRANCE SHALL BE MAINTAINED IN A CONDITION THAT WILL PREVENT TRACKING OR FLOWING OF SEDIMENT ONTO PUBLIC RIGHTS-OF-WAY. THIS MAY REQUIRE PERIODIC TOP DRESSING WITH ADDITIONAL STONE AS CONDITIONS DEMAND AND REPAIR AND/OR CLEAN OUT OF ANY MEASURES USED TO TRAP SEDIMENT. ALL SEDIMENT SPILLED, WASHED, OR TRACKED ONTO PUBLIC RIGHT-OF-WAY MUST BE REMOVED PROMPTLY.
8. TO BE CONSTRUCTED IAW NH SWM #3 4-2 SEDIMENT CONTROL PRACTICES, TEMPORARY CONSTRUCTION EXIT, PAGE 124.

## E6

*EROSION CONTROL MIX BERM*
NOT TO SCALE

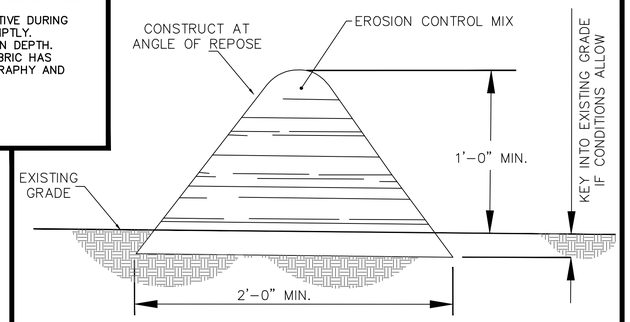


EROSION CONTROL MIX BERMS SHALL BE USED ONLY AS FOLLOWS:

1. BERMS SHALL BE USED IN AREAS WHERE EROSION WILL OCCUR ONLY IN THE FORM OF SHEET EROSION AND THERE IS NO CONCENTRATION OF WATER IN A CHANNEL OR DRAINAGE WAY ABOVE THE BERM.
2. THE BERMS SHALL BE INSTALLED FOLLOWING THE CONTOUR OF THE LAND AS CLOSLY AS POSSIBLE.
3. THE BERMS SHALL BE INSTALLED ON SLOPES LESS THAN 5%.
4. SUBJECT TO (E), BELOW, THE MIX SHALL HAVE AN ORGANIC PORTION BETWEEN 80 AND 100%, DRY WEIGHT BASIS, AND BE FIBROUS AND ELONGATED SUCH AS FROM SHREDDED BARK, STUMP GRINDINGS, COMPOSED BARK, OR EQUIVALENT MANUFACTURED PRODUCTS.
5. WOOD AND BARK CHIPS, GROUND CONSTRUCTION DEBRIS, OR REPROCESSED WOOD PRODUCTS SHALL NOT BE USED AS ORGANIC MATERIAL.
6. THE MIX SHALL NOT CONTAIN SILTS, CLAY, OR FINE SANDS.
7. THE MIX SHALL HAVE A PARTICLE SIZE BY WEIGHT OF 70 TO 85% PASSING A 6-INCH SCREEN AND A MAXIMUM OF 85% PASSING THE 0.75-INCH SCREEN.
8. THE MIX PH SHALL BE BETWEEN 5.0 AND 8.0.
9. THE BERM SHALL BE AT LEAST 12 INCHES HIGH AND AT LEAST 2 FEET WIDE.
10. TO BE CONSTRUCTED IAW NH SWM #3 4-2 SEDIMENT CONTROL PRACTICES, EROSION CONTROL MIX BERMS, PAGE 106.

## E7

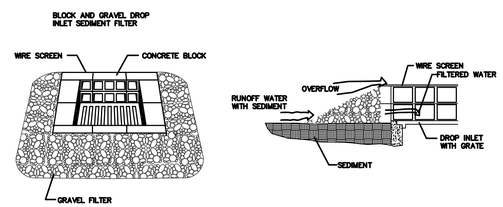


MAINTENANCE

ALL STRUCTURES SHOULD BE INSPECTED AFTER EVERY RAIN STORM AND REPAIRS MADE AS NECESSARY. SEDIMENT SHOULD BE REMOVED FROM TRAPPING DEVICES AFTER THE SEDIMENT HAS REACHED A MAXIMUM OF ONE HALF THE DEPTH OF THE TRAP. THE SEDIMENT SHOULD BE DISPOSED OF IN A SUITABLE AREA AND PROTECTED FROM EROSION BY EITHER STRUCTURE OR VEGETATIVE MEANS. THE TEMPORARY TRAPS SHOULD BE REMOVED AND THE AREA REPAIRED AS SOON AS THE CONTRIBUTING DRAINAGE AREA TO THE INLET HAS BEEN COMPLETELY STABILIZED.

*BLOCK & GRAVEL DROP INLET SEDIMENT FILTER*
NOT TO SCALE

TO BE USED IN ALL AREAS WHERE THERE WILL BE NO TRAFFIC.

TO BE CONSTRUCTED IAW NH SWM #3 4-2 SEDIMENT CONTROL PRACTICES, TEMPORARY STORM DRAIN INLET PROTECTION, PAGE 118.

## E8

*TEMPORARY EROSION CONTROL MEASURES*

1. THE SMALLEST PRACTICAL AREA OF LAND SHALL BE EXPOSED AT ANY ONE TIME.
2. EROSION, SEDIMENT AND DETENTION MEASURES SHALL BE INSTALLED AS SHOWN ON THE PLANS AND AT LOCATIONS AS REQUIRED, DIRECTED BY THE ENGINEER.
3. ALL DISTURBED AREAS SHALL BE RETURNED TO ORIGINAL GRADES AND ELEVATIONS. DISTURBED AREAS SHALL BE LOAMED WITH A MINIMUM OF 4" OF LOAM AND SEEDED WITH NOT LESS THAN ONE POUND OF SEED PER 50 SQUARE YARDS OF AREA. (SEE SEED SPECIFICATIONS THIS SHEET)
4. ALL DISTURBED AREAS WILL BE RESTABILIZED WITHIN 45 DAYS. AT ANY ONE TIME, NO MORE THAN 5 ACRES, (217,800 Sq. Ft.) WILL BE DISTURBED.
5. SILT FENCES AND PERIMETER BARRIERS SHALL BE INSPECTED PERIODICALLY AND AFTER EVERY RAIN DURING THE LIFE OF THE PROJECT. ALL DAMAGED AREAS SHALL BE REPAIRED, SEDIMENT DEPOSITS SHALL PERIODICALLY BE REMOVED AND DISPOSED OF.
6. AFTER ALL DISTURBED AREAS HAVE BEEN STABILIZED, THE TEMPORARY EROSION AND SEDIMENT CONTROL MEASURES ARE TO BE REMOVED AND THE AREA DISTURBED BY THE REMOVAL SMOOTHED AND RE-VEGETATED.
7. PER THE EPA CGP REQUIREMENTS THERE WILL BE REPORTS OF THE EROSION CONTROL INSPECTIONS IAW SWPPP PREPARED BY BS&E. ALL EROSION CONTROLS SHALL BE INSPECTED WEEKLY AND WITHIN 24 HOURS AFTER 0.5" OR GREATER RAIN EVENT.
8. DITCHES, SWALES, AND BASINS SHALL BE STABILIZED PRIOR TO DIRECTING RUNOFF TO THEM.
9. DO NOT TRAFFIC EXPOSED SOIL SURFACES WITH CONSTRUCTION EQUIPMENT. IF FEASIBLE, PERFORM EXCAVATIONS WITH EQUIPMENT POSITIONED OUTSIDE THE LIMITS OF THE INFILTRATION SYSTEM.
10. DRIVEWAYS AND CUT AND FILL SPLOPES MUST BE STABILIZED WITHIN 72 HOURS OF ACHIEVING FINAL GRADE.
11. STABILIZATION MEANS:
    - 11.1. A MINIMUM OF 85% OF VEGETATIVE COVER HAS BEEN ESTABLISHED.
    - 11.2. A MINIMUM OF 3 INCHES OF NON-EROSIVE MATERIAL SUCH AS STONE OR RIP RAP HAS BEEN INSTALLED, OR
    - 11.3. EROSION CONTROL BLANKETS HAVE BEEN INSTALLED.
12. THIS PROJECT IS TO BE MANAGED IN A MANNER THAT MEETS THE REQUIREMENTS AND INTENT OF RSA 430:53 AND CHAPTER AGR 3800 RELATIVE TO INVASIVE SPECIES.
13. THE NHDES STORMWATER MANUAL, IN THREE VOLUMES, DATED DECEMBER 2008, IS A PART OF THIS PLAN SET AND THE MORE RESTRICTIVE WILL GOVERN. (NH SWM)

## E9

*STONE CHECK DAM*
NOT TO SCALE

THE DISTANCE SUCH THAT POINTS A AND B ARE OF EQUAL ELEVATION.

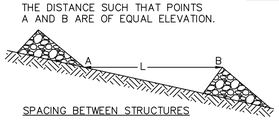


SPACING BETWEEN STRUCTURES

*NOTE:* KEY STONE INTO CHANNEL BANKS AND EXTEND IT BEYOND THE ABUTMENTS A MINIUM OF 18" TO PREVENT FLOW AROUND THE DAM.

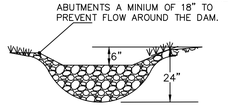


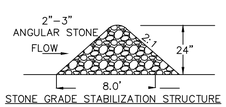


STONE GRADE STABILIZATION STRUCTURE

1.) CHECK DAMS SHOULD BE INSTALLED BEFORE RUNOFF IS DIRECTED TO THE SWALE OR DRAINAGE DITCH.
2.) THE MAXIMUM CONTRIBUTING DRAINAGE AREA TO THE DAM SHOULD BE LESS THEN ONE ACRE.
3.) THE MAXIMUM HEIGHT OF THE DAM SHOULD BE TWO FEET.
4.) THE CENTER OF THE DAM SHOULD BE AT LEAST SIX INCHES LOWER THAN THE OUTER EDGES.
5.) THE MAXIMUM SPACING IS AS SHOWN ON THE PROJECT SITE PLANS.
6.) CHECK DAMS WILL NOT BE USED IN A FLOWING STREAM.
7.) TEMPORARY CHECK DAMS WILL BE REMOVED ONCE THE SWALE OR DITCH IS DETERMINED STABLE.
8.) TO BE CONSTRUCTED IAW NH SWM #3 4-2 SEDIMENT CONTROL PRACTICES, TEMPORARY CHECK DAMS, PAGE 114.

## E10

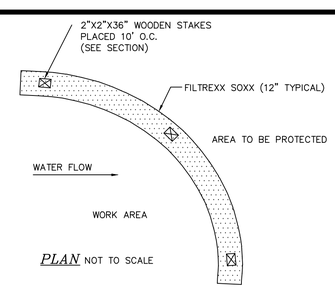


*PLAN* NOT TO SCALE

*FILTREXX SEDIMENT CONTROL*
NOT TO SCALE

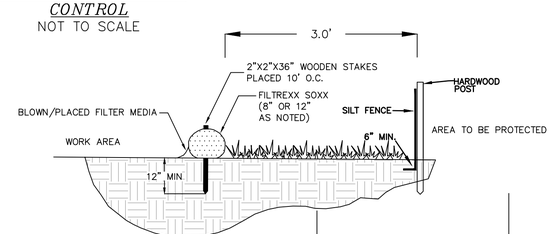


*SECTION* NOT TO SCALE

*NOTES*

1. ALL MATERIAL TO MEET FILTREXX SPECIFICATIONS.
2. FILTER MEDIA FILL TO MEET APPLICATION REQUIRMENTS.
3. COMPOST MATERIAL TO BE DISPERSED ON SITE, AS DETERMINED BY ENGINEER.
4. SILTSOXX MAY BE USED IN PLACE OF SILT FENCE OR OTHER SEDIMENT BARRIERS.
5. SILTSOXX COMPOST/SOIL/ROCK/SEED FILL MATERIAL SHALL BE ADJUSTED AS NECESSARY TO MEET THE REQUIRMENTS OF THE SPECIFIC APPLICATION.
6. FILTREXX SOXX IS A REGISTERED TRADEMARK OF FILTREXXIN TERNATIONAL, LLC.
7. SILT FENCE IS NOT A SUBSTITUTION FOR SILT SOXX AND ANY EQUAL SUBSTITUTION TO BE APPROVED.
8. TO BE CONSTRUCTED IAW FILTREXX, SECTION 1:EROSION & SEDIMENT CONTROL (PAGE 323) - CONSTRUCTION ACTIVITIES, SWPPP CUT SHEET: FILTREXX SEDIMENT CONTROL

Filtrexx International, LLC
35481 Grafton Eastern Rd | Grafton, Oh 44044
440-926-2607 | fax: 440-926-4021
WWW.FILTREXX.COM
OR APPROVED EQUAL

NOTE: FOR AREAS REQUIRING DOUBLE PERIMETER CONTROL WITHIN 50' OF JURISDICTIONAL WETLANDS AND NOT FOR ALL SILT SOXX APPLICATIONS. THIS DUPLICATION MAY BE SPECIFIED AS 12" SILT SOXX OR ORANGE CONSTRUCTION FENCE AS NOTED.

## E11

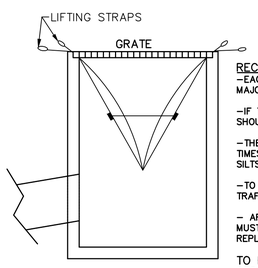


RECOMMENDED MAINTENANCE SCHEDULE

-EACH SILTSACK SHOULD BE INSPECTED AFTER EVERY MAJOR RAIN EVENT, AND MUST BE MAINTAINED.

-IF THERE HAVE BEEN NO MAJOR EVENTS, SILTSACK SHOULD BE INSPECTED EVERY 2-3 WEEKS.

-THE RESTRAINT CORD SHOULD BE VISIBLE AT ALL TIMES. IF CORD IS COVERED WITH SEDIMENT, THE SILTSACK SHOULD BE EMPTIED.

-TO BE USED IN ALL AREAS WHERE THERE WILL BE TRAFFIC.

- ARE SUBJECT TO DAMAGE BY SNOW PLOWS, AND MUST BE INSPECTED AFTER ANY SNOW EVENT AND REPLACED AS REQUIRED.

TO BE CONSTRUCTED IAW NH SWM #3 4-2 SEDIMENT CONTROL PRACTICES, TEMPORARY STORM DRAIN INLET PROTECTION, PAGE 118.

*SILTSACK DETAIL*
NOT TO SCALE

**E-101**

DOVER PLANNING #16-31C

| REVISION | DATE | DESCRIPTION |
|---|---|---|
| #3 | 4-27-18 | REVISE PER ABUTTER COMMENT |
| #2 | 3-27-18 | REVISED PER ZONING CHANGE |
| #1 | 2-19-18 | REVISED PER TRC COMMENTS |

EROSION & SEDIMENT CONTROL DETAILS
FOR
6 GROVE STREET RESIDENCES, LLC
FOR PROPERTY LOCATED AT
6 GROVE STREET, DOVER NH
***TAX MAP 31 LOT 14***


BERRY SURVEYING & ENGINEERING
335 SECOND CROWN POINT ROAD
BARRINGTON, NH 03825 (603)332-2863


SCALE : AS SHOWN
DATE : JANUARY 18, 2018
FILE NO. : DB 2016 - 090

STATE OF NEW HAMPSHIRE
KENNETH A. BERRY
No. 10043
LICENSED
PROFESSIONAL ENGINEER

## E12

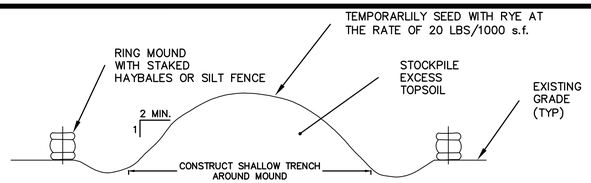


### TOPSOIL STOCKPILE MOUND

NOT TO SCALE

TO BE CONSTRUCTED IAW NH SWM #3 4–1 EROSION CONTROL PRACTICES, SOIL STOCKPILE PRACTICES, PAGE 46.

## E13

### PIPE OUTLET PROTECTION

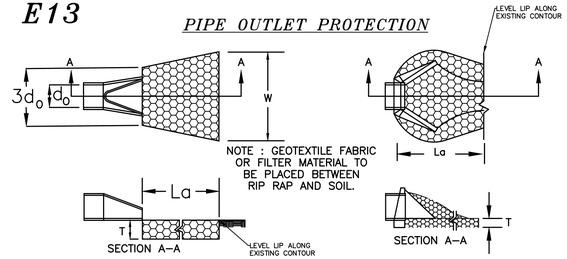


PIPE OUTLET TO FLAT AREA WITH NO DEFINED CHANNEL

PIPE OUTLET TO WELL–DEFINED CHANNEL

### PIPE OUTLET PROTECTION CONSTRUCTION SPECIFICATIONS

1. THE SUB GRADE FOR THE FILTER MATERIAL, GEOTEXTILE FABRIC, AND RIP RAP SHALL BE PREPARED TO THE LINES AND GRADES SHOWN ON THE PLANS. SPECIFIED GRADATION.
2. THE ROCK OR GRAVEL USED FOR FILTER OF RIP RAP SHALL CONFORM TO NHDOT SECTION 583.
3. GEOTEXTILE FABRICS SHALL BE PROTECTED FROM PUNCTURE OR TEARING DURING THE PLACEMENT OF THE ROCK RIP RAP DAMAGED AREAS IN THE FABRIC SHALL BE REPAIRED BY PLACING A PIECE OF FABRIC OVER THE DAMAGED AREA OR BY COMPLETE REPLACEMENT OF THE FABRIC. ALL OVERLAPS REQUIRED FOR REPAIRS OR JOINING TWO PIECES OF FABRIC SHALL BE A MINIMUM OF 12 INCHES.
4. STONE FOR THE RIP RAP MAY BE PLACED BY EQUIPMENT AND SHALL BE CONSTRUCTED TO THE FULL LAYER THICKNESS IN ONE OPERATION AND IN SUCH A MANNER AS TO PREVENT SEGREGATION OF THE STONE SIZES.
5. TO BE CONSTRUCTED IAW NH SWM #2 4–6 CONVEYANCE PRACTICES, 6. OUTLET PROTECTION, PAGE 172.

## E14

| TABLE 7–24––RECOMMENDED RIP RAP GRADATION RANGES | | |
|---|---|---|
| d50 SIZE= 0.5 FEET 6 INCHES | | |
| % OF WEIGHT SMALLER THAN THE GIVEN d50 SIZE | SIZE OF STONE (INCHES) FROM | TO |
| 100% | 9 | 12 |
| 85% | 8 | 11 |
| 50% | 6 | 9 |
| 15% | 2 | 3 |

## E15

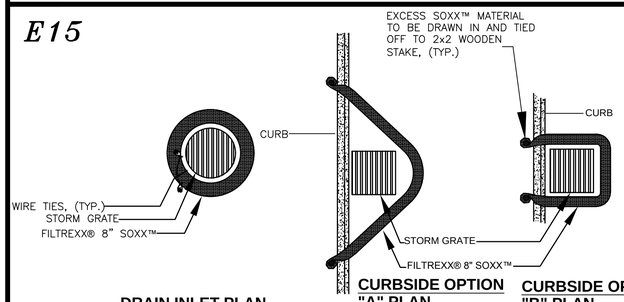


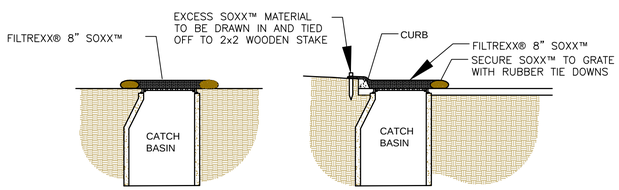


NOTES:
1. ALL MATERIAL TO MEET FILTREXX® SPECIFICATIONS.
2. FILTER MEDIA™ FILL TO MEET APPLICATION REQUIREMENTS.
3. COMPOST MATERIAL TO BE DISPERSED ON SITE, AS DETERMINED BY ENGINEER.

### FILTREXX INLET PROTECTION

NOT TO SCALE

## E16

NOTE: THIS PROJECT IS TO BE MANAGED IN A MANNER THAT MEETS THE REQUIREMENTS AND INTENT OF RSA 430:53 AND CHAPTER AGR 3800 RELATIVE TO INVASIVE SPECIES.

**NOTE: Temporary seed mix for stabilization of turf shall be winter rye or oats at a rate of 2.5 lbs. per 1000 s.f. and shall be placed prior to OCT. 15, if permanent seeding not yet complete.**

### SEEDING GUIDE

| USE | SEEDING MIXTURE 1/ | DROUGHTY | WELL DRAINED | MODERATELY WELL DRAINED | POORLY DRAINED |
|---|---|---|---|---|---|
| STEEP CUTS AND FILLS, BORROW AND DISPOSAL AREAS | A | FAIR | GOOD | GOOD | FAIR |
| | B | POOR | GOOD | FAIR | FAIR |
| | C | POOR | GOOD | EXCELLENT | GOOD |
| | D | FAIR | FAIR | GOOD | EXCELLENT |
| | E | FAIR | EXCELLENT | EXCELLENT | POOR |
| WATERWAYS, EMERGENCY SPILLWAYS, AND OTHER CHANNELS WITH FLOWING WATER. | A | GOOD | GOOD | GOOD | FAIR |
| | C | GOOD | EXCELLENT | EXCELLENT | FAIR |
| | D | GOOD | EXCELLENT | EXCELLENT | FAIR |
| LIGHTLY USED PARKING LOTS, ODD AREAS, UNUSED LANDS, AND LOW INTENSITY USE RECREATION SITES. | A | GOOD | GOOD | GOOD | FAIR |
| | B | GOOD | GOOD | FAIR | POOR |
| | C | GOOD | EXCELLENT | EXCELLENT | FAIR |
| | D | FAIR | GOOD | GOOD | EXCELLENT |
| PLAY AREAS AND ATHLETIC FIELDS. (TOPSOIL IS ESSENTIAL FOR GOOD TURF.) | F | FAIR | EXCELLENT | EXCELLENT | 2/ |
| | G | FAIR | EXCELLENT | EXCELLENT | 2/ |

GRAVEL PIT, SEE NH–PM–24 IN APPENDIX FOR RECOMMENDATION REGARDING RECLAMATION OF SAND AND GRAVEL PITS.

1/ REFER TO SEEDING MIXTURES AND RATES IN TABLE 7–36.
2/ POORLY DRAINED SOILS ARE NOT DESIRABLE FOR USE AS PLAYING AREA AND ATHLETIC FIELDS.

### SEEDING RATES

| MIXTURE | POUNDS PER ACRE | POUNDS PER 1,000 Sq. Ft. |
|---|---|---|
| A. TALL FESCUE | 20 | 0.45 |
| CREEPING RED FESCUE | 20 | 0.45 |
| RED TOP | 2 | 0.05 |
| TOTAL | 42 | 0.95 |
| B. TALL FESCUE | 15 | 0.35 |
| CREEPING RED FESCUE | 10 | 0.25 |
| CROWN VETCH OR | 15 | 0.35 |
| FLAT PEA | 30 | 0.70 |
| TOTAL | 40 OR 55 | 0.95 OR 1.35 |
| C. TALL FESCUE | 24 | 0.55 |
| CREEPING RED FESCUE | 24 | 0.55 |
| BIRDS FOOT TREFOIL | REMOVED | REMOVED |
| TOTAL | 48 | 1.10 |
| D. TALL FESCUE | 20 | 0.45 |
| FLAT PEA | 30 | 0.75 |
| TOTAL | 50 | 1.20 |
| E. CREEPING RED FESCUE 1/ | 50 | 1.15 |
| KENTUCKY BLUEGRASS 2/ | 50 | 1.15 |
| TOTAL | 100 | 2.30 |
| F. TALL FESCUE 1 | 150 | 3.60 |

* RECOMMENDED

| CONSERVATION MIX | POUNDS PER ACRE | POUNDS PER 1,000 S.F. |
|---|---|---|
| RED FESCUE (35%) | 75 | 1.75 |
| TALL FESCUE (25%) | 55 | 1.25 |
| ANNUAL RYEGRASS (12%) | 33 | 0.75 |
| PERENNIAL RYEGRASS (10%) | 26 | 0.60 |
| KENTUCKY BLUEGRASS (10%) | 22 | 0.50 |
| WHITE CLOVER (3%) | 7 | 0.15 |

### SEEDING SPECIFICATIONS

1. GRADING AND SHAPING
   A. SLOPES SHALL NOT BE STEEPER THAN 2:1; 3:1 SLOPES OR FLATTER ARE PREFERRED.
   WHERE MOWING WILL BE DONE, 3:1 SLOPES OR FLATTER ARE RECOMMENDED.
2. SEEDBED PREPARATION
   A. SURFACE AND SEEPAGE WATER SHOULD BE DRAINED OR DIVERTED FROM THE SITE TO PREVENT DROWNING OR WINTER KILLING OF THE PLANTS.
   B. STONES LARGER THAN 4 INCHES AND TRASH SHOULD BE REMOVED BECAUSE THEY INTERFERE WITH SEEDING AND FUTURE MAINTENANCE OF THE AREA. WHERE FEASIBLE, THE SOIL SHOULD BE TILLED TO A DEPTH OF ABOUT 4 INCHES TO PREPARE A SEED BED AND MIX FERTILIZER AND LIME INTO THE SOIL. THE SEEDBED SHOULD BE LEFT IN REASONABLY FIRM AND SMOOTH CONDITION. THE LAST TILLAGE OPERATION SHOULD BE PERFORMED ACROSS THE SLOPE WHEREVER PRACTICAL.
3. ESTABLISHING A STAND
   A. LIME AND FERTILIZER SHOULD BE APPLIED PRIOR TO OR AT THE TIME OF SEEDING
   AND INCORPORATED INTO THE SOIL KINDS AND AMOUNTS OF LIME AND FERTILIZER SHOULD BE BASED ON AN EVALUATION OF SOIL TESTS. WHEN A SOIL TEST IS NOT AVAILABLE,
   THE FOLLOWING MINIMUM AMOUNTS SHOULD BE APPLIED:
   AGRICULTURAL LIMESTONE, 2 TONS PER ACRE OR 100LBS. PER 1,000 SQ.FT.
   NITROGEN(N), 50LBS. PER ACRE OR 1.1LBS. PER 1,000 SQ.FT.
   PHOSPHATE(P205), 100LBS. PER ACRE OR 2.2LBS. PER 1,000 SQ.FT.
   POTASH(K20), 100LBS. PER ACRE OR 2.2LBS. PER 1,000 SQ.FT.
   (NOTE: THIS IS THE EQUIVALENT OF 500LBS. PER ACRE OF 10–20–20 FERTILIZER OR 1,000LBS. PER ACRE OF 5–10–10.)
   B. SEED SHOULD BE SPREAD UNIFORMLY BY THE METHOD MOST APPROPRIATE FOR THE SITE. METHODS INCLUDE BROADCASTING, DRILLING AND HYDROSEEDING. WHERE BROADCASTING IS USED, COVER SEED WITH .25 INCH OF SOIL OR LESS, BY CULTIPACKING OR RAKING.
   C. REFER TO TABLE(G–E1 THIS SHEET) FOR APPROPRIATE SEED MIXTURES AND TABLE(H–E1 THIS SHEET) FOR RATES OF SEEDING. ALL LEGUMES (CROWNVETCH, BIRDSFOOT TREFOIL, AND FLATPEA) MUST BE INOCULATED WITH THEIR SPECIFIC INOCULANT.
   D. WHEN SEEDED AREAS ARE MULCHED, PLANTINGS MAY BE MADE FROM EARLY SPRING TO EARLY OCTOBER. WHEN SEEDED AREAS ARE NOT MULCHED, PLANTINGS SHOULD BE MADE FROM EARLY SPRING TO MAY 20 OR FROM AUGUST 10 TO SEPTEMBER 1.
4. MULCH
   A. HAY, STRAW, OR OTHER MULCH, WHEN NEEDED, SHOULD BE APPLIED IMMEDIATELY AFTER SEEDING.
   B. MULCH WILL BE HELD IN PLACE USING APPROPRIATE TECHNIQUES FROM THE BEST MANAGEMENT PRACTICE FOR MULCHING. HAY OR STRAW MULCH SHALL BE PLACED AT A RATE OF 90LBS PER 1000 S.F.
5. MAINTENANCE TO ESTABLISH A STAND
   A. PLANTED AREA SHOULD BE PROTECTED FROM DAMAGE BY FIRE, GRAZING, TRAFFIC, AND DENSE WEED GROWTH.
   B. FERTILIZATION NEEDS SHOULD BE DETERMINED BY ONSITE INSPECTIONS. SUPPLEMENTAL FERTILIZER IS USUALLY THE KEY TO FULLY COMPLETE THE ESTABLISHMENT OF THE STAND BECAUSE MOST PERENNIAL STAKE 2 TO 3 YEARS TO BECOME ESTABLISHED.
   C. IN WATERWAYS, CHANNELS, OR SWALES WHERE UNIFORM FLOW CONDITIONS ARE ANTICIPATED, OCCASIONAL MOWING MAY BE NECESSARY TO CONTROL GROWTH OF WOODY VEGETATION.
6. TO BE CONSTRUCTED IAW NH SWM #3 4–1 EROSION CONTROL PRACTICES, PERMANENT VEGETATION, PAGE 60.

## E17

### WINTER STABILIZATION NOTES

1. ALL DISTURBED AREAS THAT DO NOT HAVE AT LEAST 85% VEGETATIVE COVERAGE PRIOR TO OCTOBER 15TH SHALL BE STABILIZED BY APPLYING MULCH AT A RATE OF 3–4 TONS PER ACRE. ALL SIDE SLOPES, STEEPER THAN 4:1, THAT ARE NOT DIRECTED TO SWALES OR DETENTION BASINS, SHALL BE LINED WITH BIODEGRADABLE/PHOTODEGRADABLE "JUTE MATTING" (EXCELSIOR'S CURLEX II OR EQUAL). ALL OTHER SLOPES SHALL BE MULCHED AND TACKED AT A RATE OF 3–4 TONS PER ACRE. THE APPLICATION OF MULCH AND/OR JUTE MATTING SHALL NOT OCCUR OVER EXISTING SNOW COVER. IF THE SITE IS ACTIVE AFTER NOVEMBER 15TH, ANY SNOW THAT ACCUMULATES ON DISTURBED AREAS SHALL BE REMOVED. PRIOR TO SPRING THAW ALL AREAS WILL BE STABILIZED, AS DIRECTED ABOVE.

2. ALL SWALES THAT DO NOT HAVE FULLY ESTABLISHED VEGETATION SHALL BE EITHER LINED WITH TEMPORARY JUTE MATTING OR TEMPORARY STONE CHECK DAMS (APPROPRIATELY SPACED). STONE CHECK DAMS WILL BE MAINTAINED THROUGHOUT THE WINTER MONTHS. IF THE SWALES ARE TO BE MATTED WITH PERMANENT LINERS OR RIPRAP WITH ENGINEERING FABRIC, THIS SHALL BE COMPLETED PRIOR TO WINTER SHUTDOWN OR AS SOON AS THEY ARE PROPERLY GRADED AND SHAPED.

3. PRIOR TO NOV. 15TH ALL ROADWAY AND PARKING AREAS SHALL BE BROUGHT UP TO AND THROUGH THE BANK RUN GRAVEL APPLICATION. IF THESE AREAS' ELEVATIONS ARE PROPOSED TO REMAIN BELOW THE PROPOSED SUBGRADE ELEVATION, THE SUBGRADE MATERIAL SHALL BE ROUGHLY CROWNED AND A 3" LAYER OF CRUSHED GRAVEL SHALL BE PLACED AND COMPACTED. THIS WILL ALLOW THE SUBGRADE TO SHED RUNOFF AND WILL REDUCE ROADWAY EROSION. THIS CRUSHED GRAVEL DOES NOT HAVE TO CONFORM TO NH DOT 304.3, BUT SHALL HAVE BETWEEN 15–25% PASSING THE #200 SIEVE AND THE LARGEST STONE SIZE SHALL BE 2". IF THE SITE IS ACTIVE AFTER NOVEMBER 15TH, ANY ACCUMULATED SNOW SHALL BE REMOVED FROM ALL ROADWAY AND PARKING AREAS.

4. AFTER OCTOBER 15TH, THE END OF NEW HAMPSHIRE'S AVERAGE GROWING SEASON, NO ADDITIONAL LOAM SHALL BE SPREAD ON SIDE SLOPES AND SWALES. THE STOCKPILES THAT WILL BE LEFT UNDISTURBED UNTIL SPRING SHALL BE SEEDED BY THIS DATE. AFTER OCTOBER 15TH, ANY NEW OR DISTURBED PILES SHALL BE MULCHED AT A RATE OF 3–4 TONS PER ACRE. ALL STOCKPILES THAT WILL REMAIN THROUGHOUT THE WINTER SHALL BE SURROUNDED WITH SILT FENCING.

## E18 DEFINITION OF STABLE:

1. WHEN A BASE COURSE GRAVEL HAS BEEN INSTALLED IN AN AREA TO BE PAVED
2. WHEN A MINIMUM OF 85% VEGITATIVE GROWTH OCCURS.
3. WHEN A MINIMUM OF 3" OF NON–EROSIVE MATERIAL,SUCH AS STONE OR RIP–RAP HAS BEEN INSTALLED.
4. WHEN PROPER EROSION CONTROL BLANKETS, SUCH AS CURLEX II, C350 OR OTHER DOT APPROVED MATTING, HAS BEEN INSTALLED PROPERLY.
5. HAY MULCH OR OTHER APPROVED METHODS SHALL BE USED TO CONTROL EROSION OF NEWLY GRADED AREAS. ALL CUT AND FILL SLOPES SHALL BE SEEDED AND MULCHED WITHIN 72 HOURS AFTER THEIR CONSTRUCTION.
6. CITY OF DOVER CHAPTER 149–14 A: DISTURBED SOIL AREAS SHALL BE EITHER TEMPORARILY OR PERMANENTLY STABILIZED. IN AREAS WHERE FINAL GRADING HAS NOT OCCURRED, TEMPORARY STABILIZATION MEASURES SHOULD BE IN PLACE WITHIN SEVEN (7) CALENDAR DAYS FOR EXPOSED SOIL AREAS THAT ARE WITHIN ONE HUNDRED (100) FEET OF A SURFACE WATER BODY OR A WETLAND AND NO MORE THAN 14 CALENDAR DAYS FOR ALL OTHER AREAS. PERMANENT STABILIZATION SHOULD BE IN PLACE WITHIN THREE (3) CALENDAR DAYS FOLLOWING COMPLETION OF FINAL GRADING OF EXPOSED SOIL AREAS.

## E19

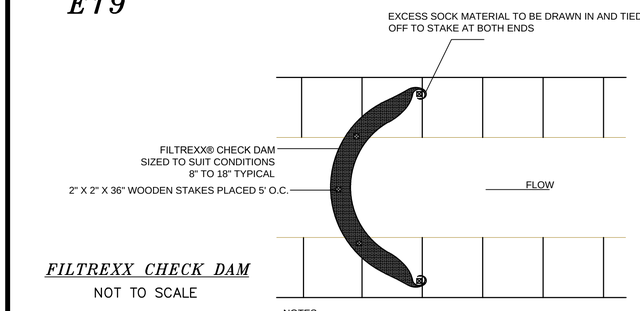


### FILTREXX CHECK DAM

NOT TO SCALE

NOTES:
1. ALL MATERIAL TO MEET FILTREXX® SPECIFICATIONS.
2. CHECK DAM SHOULD BE USED IN AREAS THAT DRAIN 10 ACRES OR LESS.
3. SEDIMENT SHOULD BE REMOVED FROM BEHIND CHECK DAM ONCE THE ACCUMULATED HEIGHT HAS REACHED ½ THE HEIGHT OF THE CHECK DAM.
4. CHECK DAM CAN BE DIRECT SEEDED AT THE TIME OF INSTALLATION.
5. CONTRACTOR IS REQUIRED TO BE A FILTREXX CERTIFIED™ INSTALLER.

## E20

FOR STEEPER SLOPES, SEE DETAIL SHEET D101 DETAIL D6

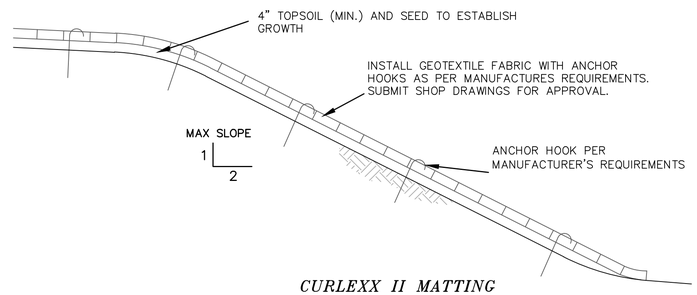


### CURLEXX II MATTING SLOPE STABILIZATION DETAIL

NOT TO SCALE

TO BE CONSTRUCTED IAW NH SWM #3 4–1 EROSION CONTROL PRACTICES, TEMPORARY EROSION CONTROL BLANKET, PAGE 68.

## E21 CONSTRUCTION SEQUENCE:

1.) CUT AND REMOVE TREES IN CONSTRUCTION AREA ONLY AS REQUIRED, RELOCATE ANY PROJECT T.B.M.

2.) CONSTRUCT AND/OR INSTALL TEMPORARY AND PERMANENT SEDIMENT EROSION AND DETENTION CONTROL FACILITIES AS SPECIFIED. EROSION AND SEDIMENT CONTROL MEASURES SHALL BE INSTALLED PRIOR TO ANY SOIL LAND DISTURBANCE AND MUST BE REVIEWED AND APPROVED BY THE COMMUNITY SERVICES DEPARTMENT.

3.) EROSION, SEDIMENT AND DETENTION CONTROL FACILITY SHALL BE INSTALLED & STABILIZED PRIOR TO DIRECTING RUNOFF TO THEM.TEMPORARY DIVERSONS MAY BE REQUIRED. POST CONSTRUCTION STORM WATER MANAGEMENT PRACTICES MUST BE INITIATED AND STABILIZED EARLY IN THE PROCESS.

4.) CLEAR, CUT AND DISPOSE OF DEBRIS IN APPROVED FACILITY

5.) CONSTRUCT TEMPORARY CULVERTS AS REQUIRED, OR DIRECTED

6.) CONSTRUCT ROADWAYS FOR ACCESS TO DESIRED CONSTRUCTION AREAS. ALL ROADS SHALL BE STABILIZED IMMEDIATELY

7.) START BUILDING CONSTRUCTION

8.) INSTALL PIPE AND CONSTRUCTION ASSOCIATED APPURTENANCES AS REQUIRED OR DIRECTED. INSTALL RAIN GARDENS. ALL DISTURBED AREAS SHALL STABILIZED IMMEDIATELY AFTER GRADING.

9.) BEGIN PERMANENT AND TEMPORARY SEEDING AND MULCHING. ALL CUT AND FILL SLOPES AND DISTURBED AREAS SHALL BE SEEDED OR MULCHED AS REQUIRED, OR DIRECTED. NO AREA IS ALLOWED TO BE DISTURBED FOR A LENGTH OF TIME THAT EXCEEDS 60 DAYS BEFORE BEING STABILIZED. DAILY, OR AS REQUIRED. ALL ROADWAYS AND PARKING AREAS SHALL BE STABILIZED WITHIN 72 HOURS OF ACHIEVING FINISHED GRADES. ALL CUT AND FILL SLOPES SHALL BE STABILIZED WITHIN 72 HOURS OF ACHIEVING FINISHED GRADES.

10.) CONSTRUCT TEMPORARY BERMS, DRAINS DITCHES, SILT FENCES, SEDIMENT TRAPS, ETC. MULCH AND SEED AS REQUIRED.

11.) INSPECT AND MAINTAIN ALL EROSION AND SEDIMENT CONTROL MEASURES DURING CONSTRUCTION. ALL SWPPP INSPECTIONS MUST BE CONDUCTED BY A QUALIFIED PROFESSIONAL SUCH AS A PROFESSIONAL ENGINEER (PE), A CERTIFIED PROFESSIONAL IN EROSION AND SEDIMENT CONTROL (CPESC), A CERTIFIED EROSION SEDIMENT AND STORM WATER INSPECTOR (CESSWI), OR A CERTIFIED PROFESSIONAL IN STORM WATER QUALITY (CPSWQ). INSPECTION REPORTS SHALL BE SUBMITTED TO THE COMMUNITY SERVICES DEPARTMENT.

12.) COMPLETE PERMANENT SEEDING AND LANDSCAPING.

13.) REMOVE TEMPORARY EROSION CONTROL MEASURES AFTER SEEDING AREAS HAVE ESTABLISHED THEMSELVES AND SITE IMPROVEMENTS ARE COMPLETE.

14.) SMOOTH AND REVEGETATE ALL DISTURBED AREAS.

15.) FINISH PAVING ALL ROADWAYS.

**E–102**

DOVER PLANNING #16–31C

| REVISION | DATE | DESCRIPTION |
|---|---|---|
| #3 | 4–27–18 | REVISE PER ABUTTER COMMENT |
| #2 | 3–27–18 | REVISED PER ZONING CHANGE |
| #1 | 2–19–18 | REVISED PER TRC COMMENTS |

EROSION & SEDIMENT CONTROL DETAILS
FOR
6 GROVE STREET RESIDENCES, LLC
FOR PROPERTY LOCATED AT
6 GROVE STREET, DOVER NH
*TAX MAP 31 LOT 14*


BERRY SURVEYING & ENGINEERING
335 SECOND CROWN POINT ROAD
BARRINGTON, NH 03825 (603)332–2863


SCALE : AS SHOWN
DATE : JANUARY 18, 2018
FILE NO. : DB 2016 – 090

STATE OF NEW HAMPSHIRE KENNETH A. BERRY No. 7424 LICENSED PROFESSIONAL ENGINEER

## D1

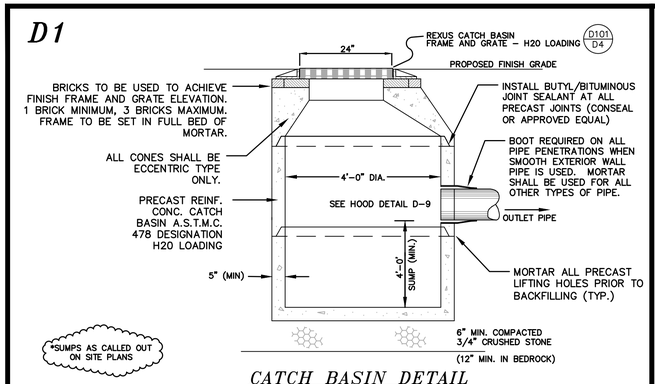


*CATCH BASIN DETAIL*

NOT TO SCALE

SEE SAND FILTER DETAILS AND GRADING AND DRAINAGE SHEETS

## D2

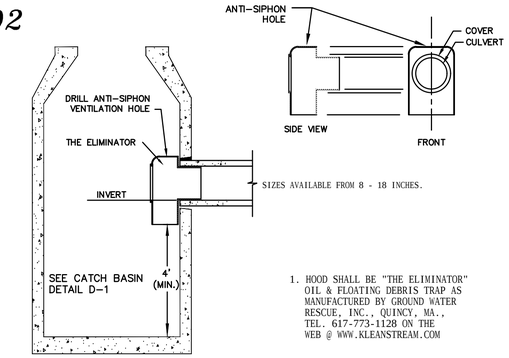


1. HOOD SHALL BE "THE ELIMINATOR" OIL & FLOATING DEBRIS TRAP AS MANUFACTURED BY GROUND WATER RESCUE, INC., QUINCY, MA., TEL. 617-773-1128 ON THE WEB @ WWW.KLEANSTREAM.COM

*CATCH BASIN HOOD DETAIL*

NOT TO SCALE

## D3

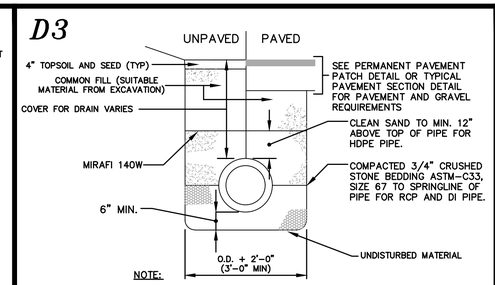


NOTE:

PLASTIC DRAIN PIPE (HDPE) SHALL BE ADS N-12 (CORRUGATED EXTERIOR/SMOOTH INTERIOR) OR EQUAL MEETING AASHTO M-252 AND H-20 LOADING.

DI DRAIN PIPE SHALL BE CL. 50.

RC DRAIN PIPE SHALL BE CLASS III UNLESS OTHERWISE NOTED.

*TYPICAL DRAIN AND SEWER PIPE TRENCH*

NOT TO SCALE

## D4

CATCH BASIN FRAME AND GRATE WILL BE REXUS, OR APPROVED EQUAL, 24 INCH OPENING, DUCTILE IRON, H20 LOADING.

## D5

RISER SECTION

| HEIGHT | ITEM NO | WEIGHT |
|---|---|---|
| 1'-0" | MH4-12CS4ID | 856# |
| 2'-0" | MH4-24CS4ID | 1,712# |
| 2'-6" | MH4-30CS4ID | 2,140# |
| 3'-0" | MH4-36CS4ID | 2,568# |
| 4'-0" | MH4-48CS4ID | 3,424# |
| 5'-0" | MH4-60CS4ID | 4,280# |

BASE SECTION

| HEIGHT | ITEM NO | WEIGHT |
|---|---|---|
| 2'-0" | MH4-24S4ID | 2,640# |
| 2'-6" | MH4-30S4ID | 3,067# |
| 3'-0" | MH4-36S4ID | 3,495# |
| 3'-6" | MH4-42S4ID | 3,922# |
| 4'-0" | MH4-48S4ID | 4,350# |
| 4'-6" | MH4-54S4ID | 4,777# |
| 5'-0" | MH4-60S4ID | 5,205# |
| 5'-6" | MH4-66S4ID | 5,633# |
| 6'-0" | MH4-72S4ID | 6,060# |

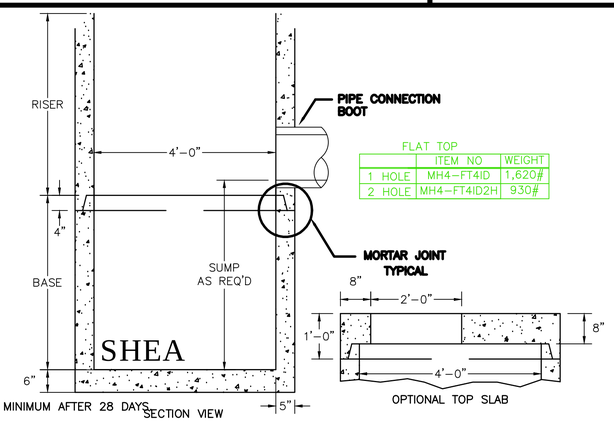


FLAT TOP

| | ITEM NO | WEIGHT |
|---|---|---|
| 1 HOLE | MH4-FT4ID | 1,620# |
| 2 HOLE | MH4-FT4ID2H | 930# |

NOTES:

1. CONCRETE: 4,000 PSI MINIMUM AFTER 28 DAYS.
2. REINFORCED STEEL CONFORMS TO LATEST ASTM A185 SPEC. 0.12 SQ. IN./LINEAL FT. AND 0.12 SQ. IN. (BOTH WAYS) BASE BOTTOM.
3. H-20 DESIGN LOADING PER AASHTO HS-20-44; ASTM C478 SPEC FOR "PRECAST REINFORCED CONCRETE MANHOLE SECTIONS."

*DRAIN MANHOLE DETAIL*

NOT TO SCALE

## D6

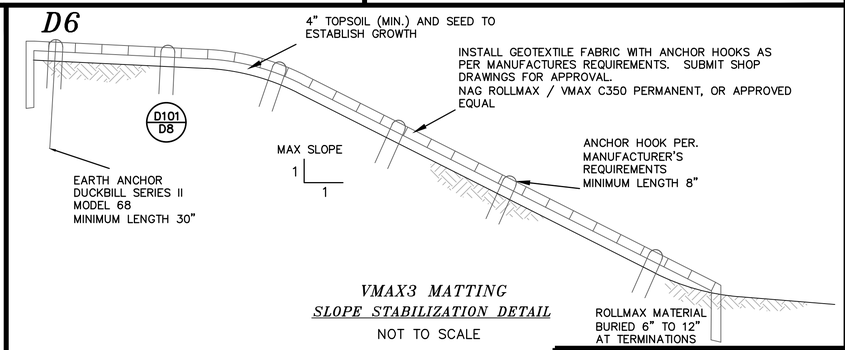


*VMAX3 MATTING*
*SLOPE STABILIZATION DETAIL*

NOT TO SCALE

## D7

*VMAX3 MATTING & CURLEX II*

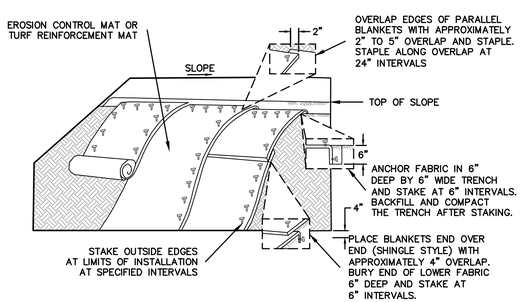


NOTE : STAKING PATTERNS SHALL FOLLOW MANUFACTURERS RECOMMENDATIONS. MINIMUM SPACING ACROSS FABRIC AS SHOWN.

*INSTALLATION OF*
*EROSION CONTROL FABRICS*

NOT TO SCALE

## D8

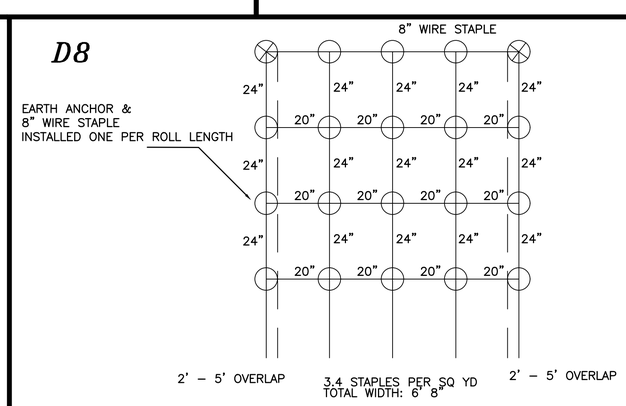


1.) THE BEGINNING AND END OF EACH ROW OF NAG C350 WILL BE BURIED SIX TO 12 INCHES DEEP.
2.) AT THE TOP OF EACH ROW WHERE THE ROWS OVERLAP, AN EARTH ANCHOR WILL BE INSTALLED TO A MINIMUM DEPTH OF 30 INCHES.
3.) STAPLES WILL BE INSTALLED AT A RATE OF 3.4 STAPLES PER SQUARE YARD AS DEMONSTRATED.
4.) STAPLES WILL BE INSTALLED TO A MINIMUM DEPTH OF 8 INCHES.
5.) ROWS OF NAG ROLLMAX WILL BE INSTALLED PARALLEL WITH AN AVERAGE OF THREE AND ONE-HALF INCHES OF OVERLAP. STAPLES WILL BE INSTALLED ALONG THE OVERLAP SEAM, AS SHOWN.

*VMAX3 MATTING*
*STAPLE PATTERN GUIDE*

NOT TO SCALE

## D9

CASTINGS ARE RATED FOR H20 WHEEL LOAD TRAFFIC

PAINT: CASTINGS ARE FURNISHED WITH A BLACK PAINT

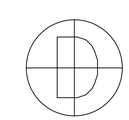

*12" CAST IRON GRATE*

NOT TO SCALE

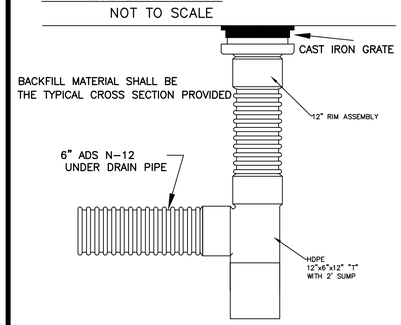


*ADS N-12 INLINE DRAIN*

NOT TO SCALE USED FOR CLEANOUTS

## D10

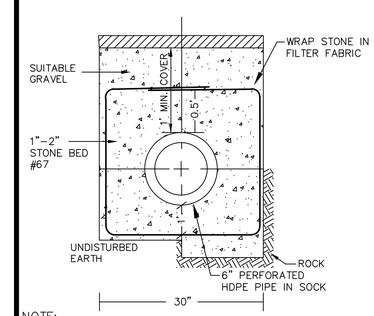


NOTE:

1. PAVEMENT REPAIR IN EXISTING ROADWAYS SHALL CONFORM TO STREET OPENING REGULATIONS.
2. NEW ROADWAY CONSTRUCTION SHALL CONFORM TO SUBDIVISION SPECS.

*UNDERDRAIN TRENCH DETAIL*

REFERENCE IS MADE TO A LONG TERM MAINTENANCE MANUAL PREPARED BY BERRY SURVEYING & ENGINEERING, WHICH IS ON FILE AT THE CITY OF DOVER PLANNING DEPARTMENT, AND CAN BE FOUND AT THE OFFICE OF BERRY SURVEYING & ENGINEERING. (603) 332-2863

**D-101**

DOVER PLANNING #16-31C

| REVISION | DATE | DESCRIPTION |
|---|---|---|
| #3 | 4-27-18 | REVISE PER ABUTTER COMMENT |
| #2 | 3-27-18 | REVISED PER ZONING CHANGE |
| #1 | 2-19-18 | REVISED PER TRC COMMENTS |

DRAINAGE DETAILS
FOR
6 GROVE STREET RESIDENCES, LLC
FOR PROPERTY LOCATED AT
6 GROVE STREET, DOVER NH
***TAX MAP 31 LOT 14***


BERRY SURVEYING & ENGINEERING
335 SECOND CROWN POINT ROAD
BARRINGTON, NH 03825 (603)332-2863


SCALE : AS SHOWN
DATE : JANUARY 18, 2018
FILE NO. : DB 2016 – 090

STATE OF NEW HAMPSHIRE
KENNETH A. BERRY
No. 14013
LICENSED
PROFESSIONAL ENGINEER

## C1

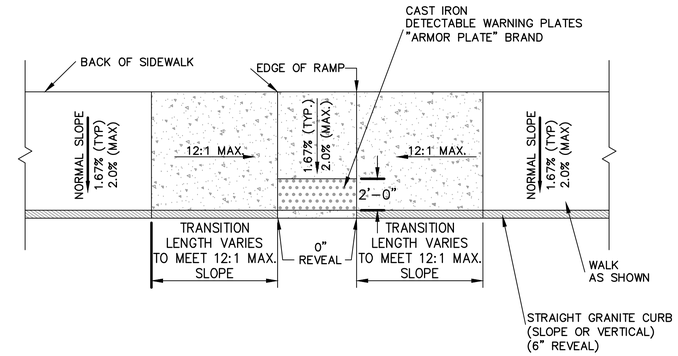


PLAN
(NOT TO SCALE)

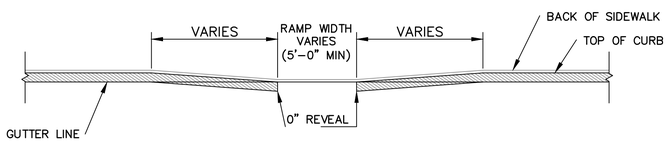


ELEVATION
(NOT TO SCALE)

*TYPICAL DETAIL FOR WHEELCHAIR RAMP*

(NOT TO SCALE)

## C2

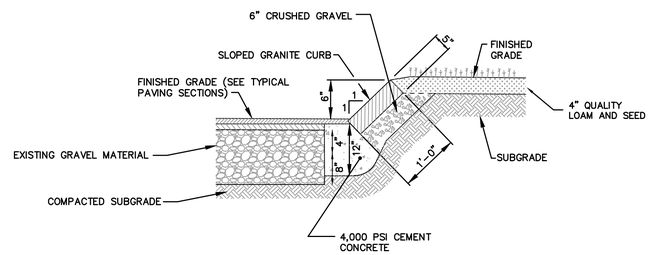


*SLOPE GRANITE CURB DETAIL*
NOT TO SCALE

## C3

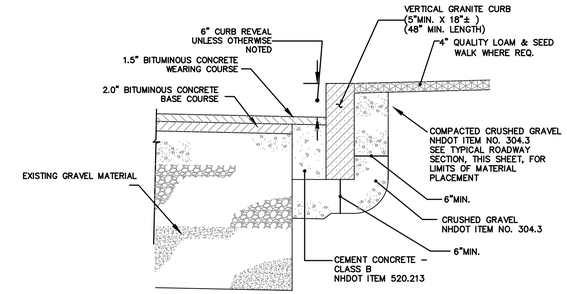


*VERTICAL GRANITE CURB DETAIL*
NOT TO SCALE

GENERAL NOTE:

1.) TO BE USED IN PLACE OF THE CONCRETE WALK AND INTEGRATED CURB AT THE OWNERS DISCRETION

## C4

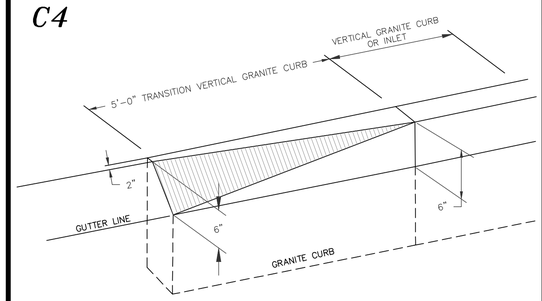


*CURB TRANSITION DETAIL*
NOT TO SCALE

TO BE USED FOR TRANSITION FROM VERTICAL GRANITE CURB TO SLOPED GRANITE CURB

## C5

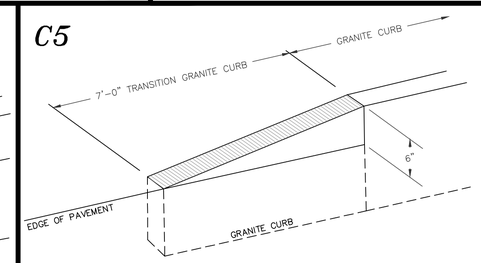


*CURB TRANSITION DETAIL*
NOT TO SCALE

TO BE USED FOR TRANSITION FROM GRANITE CURB TO EDGE OF PAVEMENT

## C6

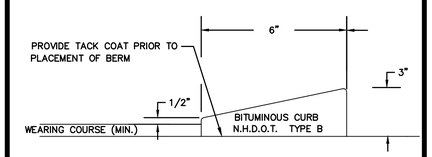


*MODIFIED CAPE COD BERM*
NOT TO SCALE

## C7

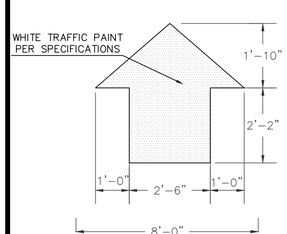


*PAVEMENT MARKINGS DETAILS*
NOT TO SCALE

## C8

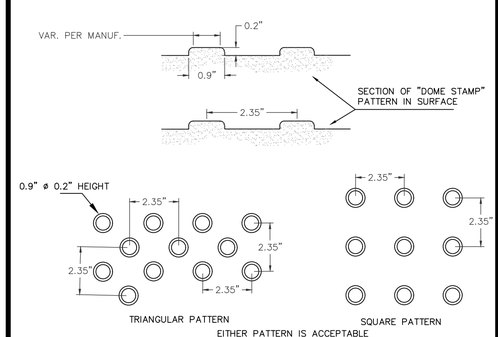


*DETECTABLE WARNING SURFACE*
NOT TO SCALE

## C9

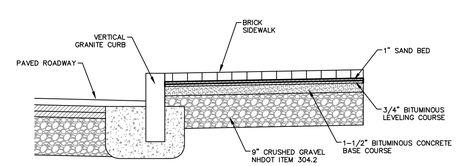


*BRICK SIDEWALK*
NOT TO SCALE

NOTE:
1.) USE POLYMERIC SAND FOR JOINTS BETWEEN BRICK

## C10

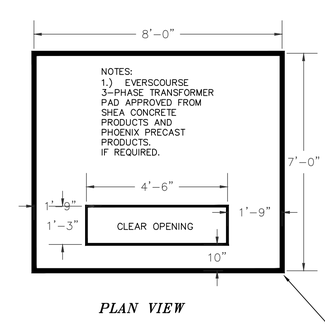


*PLAN VIEW*

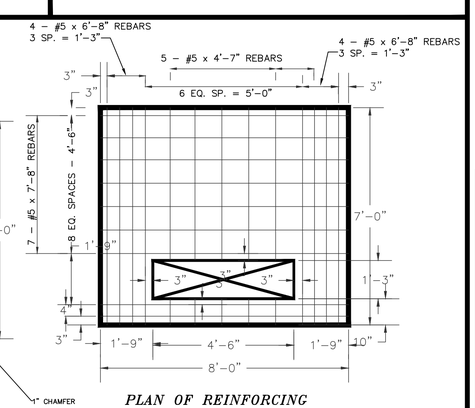


*PLAN OF REINFORCING*

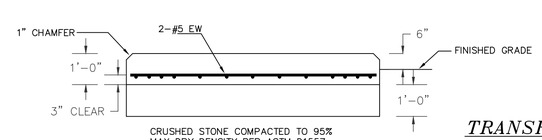


*SECTION VIEW*

*TRANSFORMER PAD DETAIL*
NOT TO SCALE

NOTES:
1.) CONFIRM SIZE WITH ELECTRIC COMPANY BEFORE CONSTRUCTION.
2.) USE LOCAL ELECTRIC COMPANY DETAILS AS REQUIRED.

**C-101**

DOVER PLANNING #16-31C

| REVISION | DATE | DESCRIPTION |
|---|---|---|
| #3 | 4-27-18 | REVISE PER ABUTTER COMMENT |
| #2 | 3-27-18 | REVISED PER ZONING CHANGE |
| #1 | 2-19-18 | REVISED PER TRC COMMENTS |

CONSTRUCTION DETAILS
FOR
6 GROVE STREET RESIDENCES, LLC
FOR PROPERTY LOCATED AT
6 GROVE STREET, DOVER NH
***TAX MAP 31 LOT 14***


BERRY & SURVEYING ENGINEERING
335 SECOND CROWN POINT ROAD
BARRINGTON, NH 03825 (603)332-2863


SCALE : AS SHOWN
DATE : JANUARY 18, 2018
FILE NO. : DB 2016 - 090

STATE OF NEW HAMPSHIRE
KENNETH A. BERRY
No. 15475
LICENSED
PROFESSIONAL ENGINEER

## C11

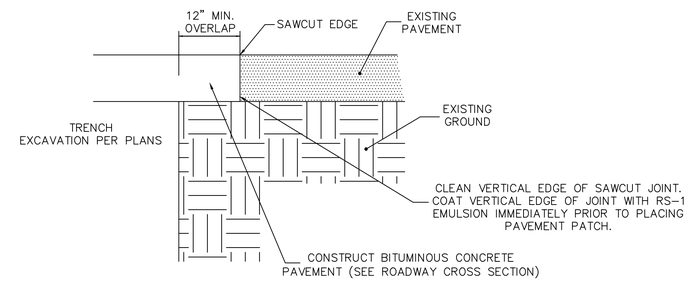


## C12

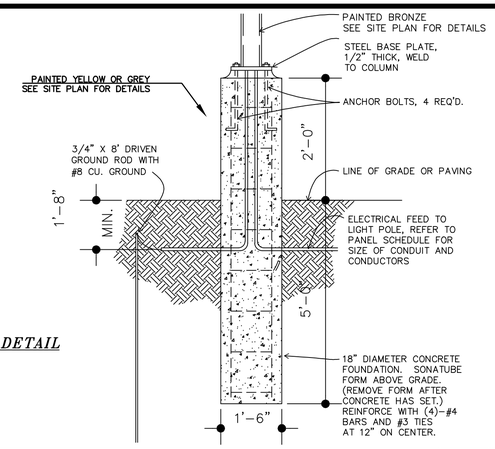


POLE FOUNDATION

*PARKING LOT LIGHT BASE DETAIL*

SCALE: NONE

## C13

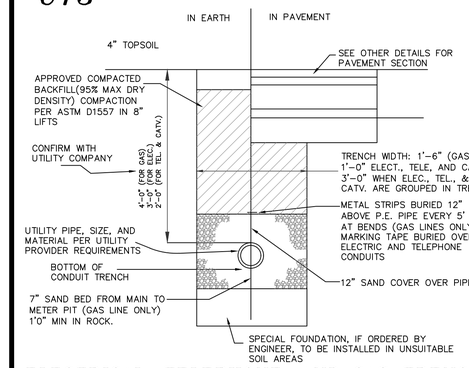


*ELECTRICAL, TELEPHONE, AND GAS TRENCH*

NOT TO SCALE

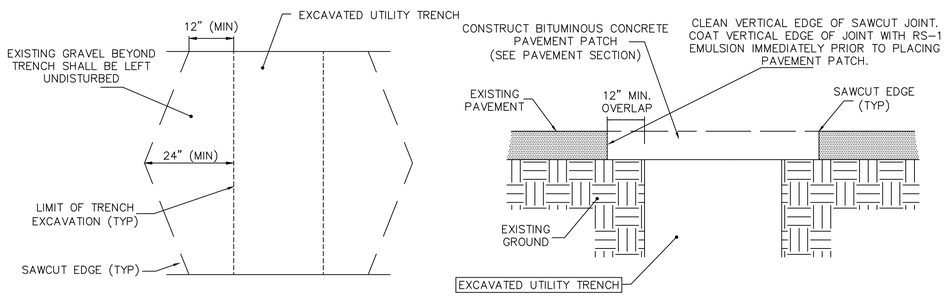


*PLAN* *SECTION*

*NOTES*
1. MACHINE CUT EXISTING PAVEMENT.
2. ALL TEMPORARY, DAMAGED, OR DEFECTIVE PAVEMENT SHALL BE REMOVED PRIOR TO PLACEMENT OF PERMANENT TRENCH REPAIRS.
3. DIAMOND PATCHES, SHALL BE REQUIRED FOR ALL TRENCHES CROSSING ROADWAY. DIAMOND PATCHES SHALL MEET NHDOT REQUIREMENTS.

*TYPICAL TRENCH PATCH*

NOT TO SCALE

## C14

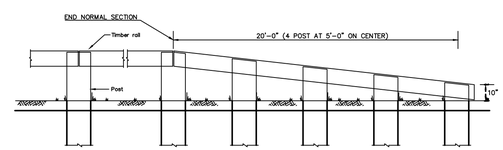


WOOD GUARD RAIL TERMINAL UNIT DETAIL

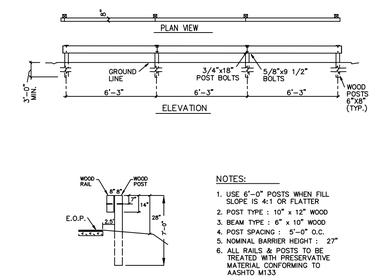


NOTES:
1. USE 6'-0" POSTS WHEN FILL SLOPE IS 4:1 OR FLATTER
2. POST TYPE : 10" x 12" WOOD
3. BEAM TYPE : 6" x 10" WOOD
4. POST SPACING : 5'-0" O.C.
5. NOMINAL BARRIER HEIGHT : 27"
6. ALL RAILS & POSTS TO BE TREATED WITH PRESERVATIVE MATERIAL CONFORMING TO AASHTO M133

*WOODEN RAIL GUARD RAIL*

NOT TO SCALE

## C15

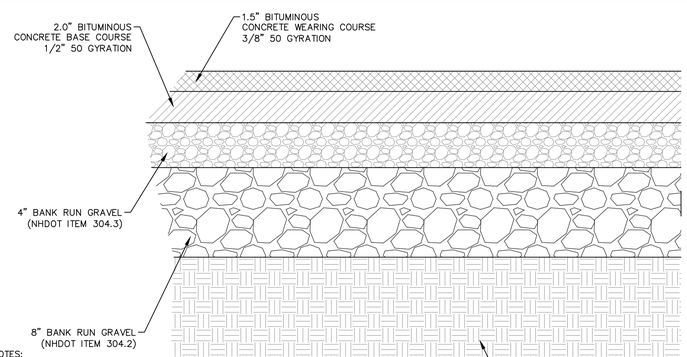


NOTES:

1.) BITUMINOUS MATERIALS SHALL CONFORM TO NHDOT SPECIFICATION SUBSECTION 401.3.6.

2.) PAVEMENT BASE COURSE AGGEGATE SHALL CONFORM TO NHDOT SPECIFICATION SECTION 304, ITEM 304.3 AND COMPACTED TO A MINIMUM OF 95% OF MODIFIED PROCTOR MAXIMUM DRY DENSITY.

3.) PAVEMENT SUBBASE COURSE AGGREGATE AND AGGREGATE FOR SUBGRADE REPAIR AREAS SHALL BE SUITABLE FOR USE AS STRUCTURAL FILL AND BE PROOFROLLED AND COMPABED TO 95% OF MODIFIED PROCTOR MAXIMUM DRY DENSITY. FOR NEW CONSTRUCTION AREAS ONLY. IN EXISTING PAVEMENT AREAS THE CONTRACTOR IS TO ENSURE THE BASE MATERIAL IS SUITABLE TO THE OWNER FOR RE-PAVING

*BITUMINOUS CONCRETE PAVEMENT SECTION*

NOT TO SCALE

## C16

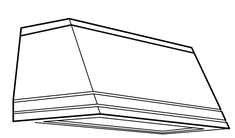

1. WST 100M WT WITH 100-WATT CLEAR ED-17 METAL HALIDE BULB
2. MOUNTED ON BUILDING 10' HIGH
3. SEE LIGHTING PLAN FOR LUMINAIRE SCHEDULE

*WALL MOUNTED LIGHTING*

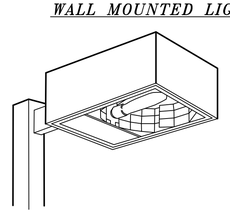

*POLE MOUNTED LIGHTING LAMP "D"*

NOT TO SCALE

*NOTES:*

1.) POLE MOUNTED LAMPS. SEE LIGHTING AND SITE PLANS FOR FURTHER DETAILS

## C17

*PARKING SPACE DETAIL*

NOT TO SCALE

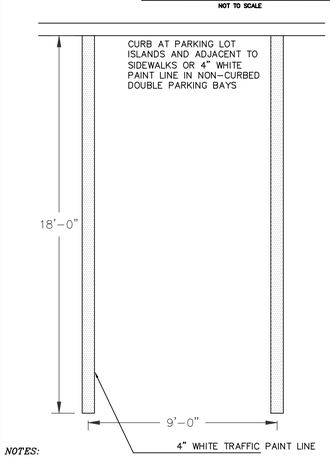


*NOTES:*

1.) PROVIDE TWO COATS OF PAINT ON ALL PARKING LINES.

2.) SEE PROPOSED SITE PLANS FOR LOCATION OF PARKING SPACES.

3.) PAINTED SPACES ONLY WHERE MARKED ON SITE PLAN

## C18

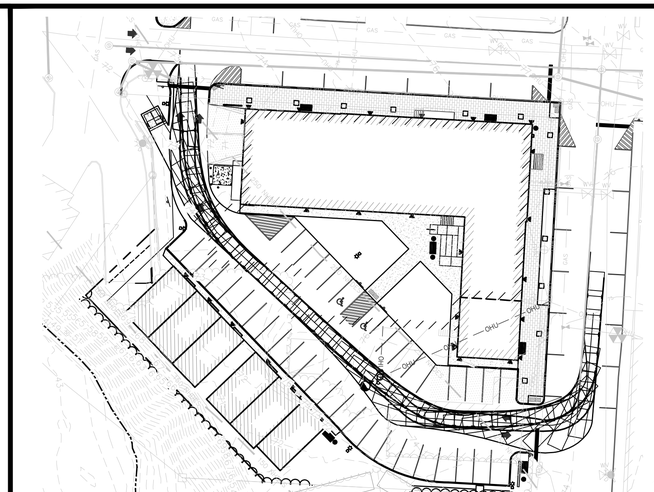

*TRUCK TURNING TEMPLATE DOVER FIRE*

NOT TO SCALE

C-102

DOVER PLANNING #16-31C

| REVISION | DATE | DESCRIPTION |
|---|---|---|
| #3 | 4-27-18 | REVISE PER ABUTTER COMMENT |
| #2 | 3-27-18 | REVISED PER ZONING CHANGE |
| #1 | 2-19-18 | REVISED PER TRC COMMENTS |

CONSTRUCTION DETAILS
FOR
6 GROVE STREET RESIDENCES, LLC
FOR PROPERTY LOCATED AT
6 GROVE STREET, DOVER NH
*TAX MAP 31 LOT 14*


BERRY SURVEYING & ENGINEERING
335 SECOND CROWN POINT ROAD
BARRINGTON, NH 03825 (603)332-2863


SCALE : AS SHOWN
DATE : JANUARY 18, 2018
FILE NO. : DB 2016 - 090

STATE OF NEW HAMPSHIRE KENNETH A. BERRY No. 7443 LICENSED PROFESSIONAL ENGINEER

## C19

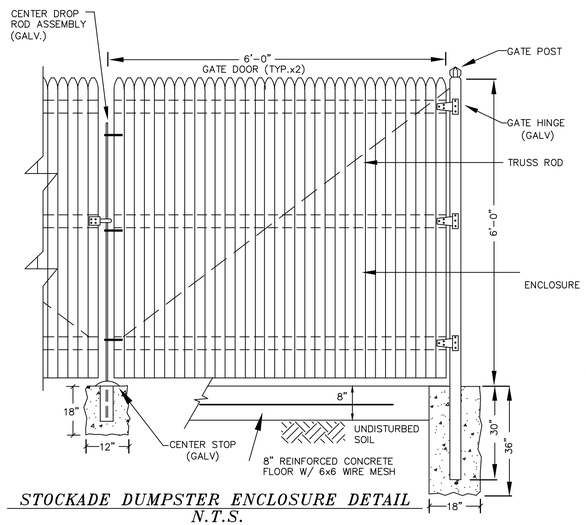


*STOCKADE DUMPSTER ENCLOSURE DETAIL*
*N.T.S.*

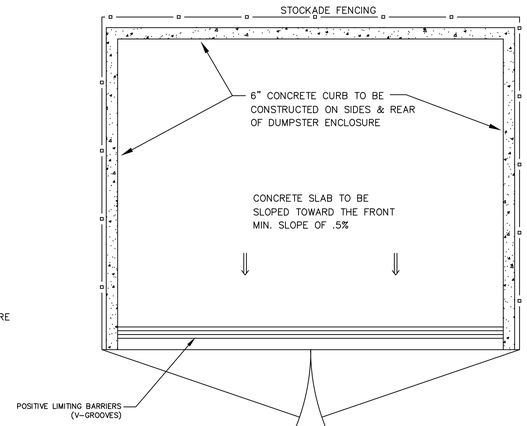


*DUMPSTER SLAB DETAILS*
*N.T.S.* NOT TO SCALE

## C20

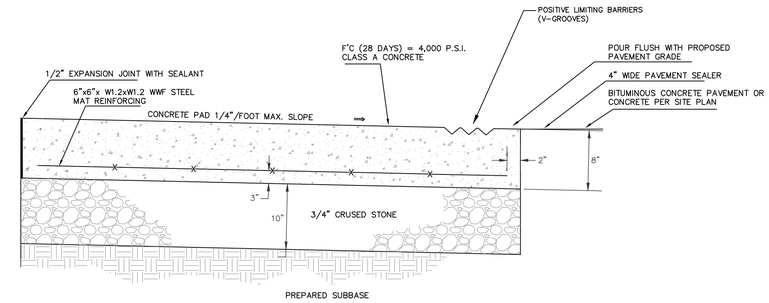


*SECTION VIEW*

*DUMPSTER PAD & CONCRETE PAVEMENT*
NOT TO SCALE

NOTES:

1.) DUMPSTER PAD WILL BE SCREENED BY STOCKADE FENCE.

2.) CONFIGURATION WILL ENCLOSE 2–8 YARD DUMPSTERS.

## C21

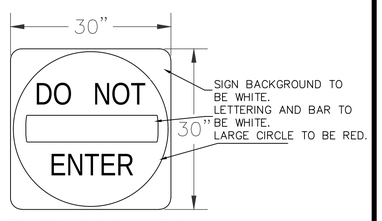


SIGN R5–1 AS SHOWN IN THE MUTCD. INSTALLATION WILL BE IN ACCORDANCE WITH THE MUTCD.

## C22

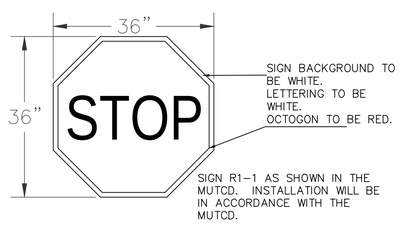


SIGN R1–1 AS SHOWN IN THE MUTCD. INSTALLATION WILL BE IN ACCORDANCE WITH THE MUTCD.

## C23

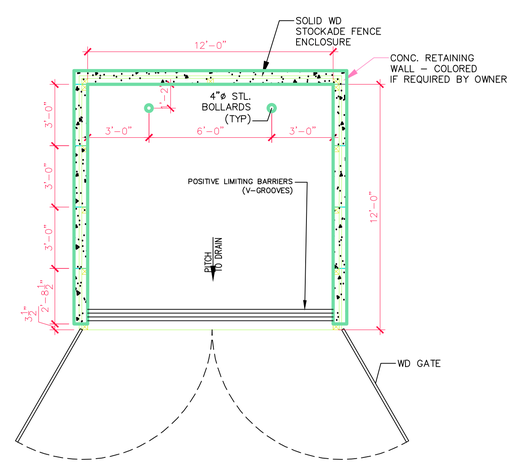


*DUMPSTER ENCLOSURE & CONCRETE PAD PLAN*
NOT TO SCALE

## C24

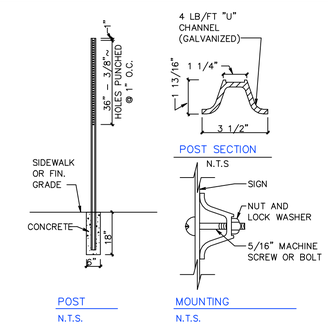


*SIGN MOUNTING DETAIL*
NOT TO SCALE

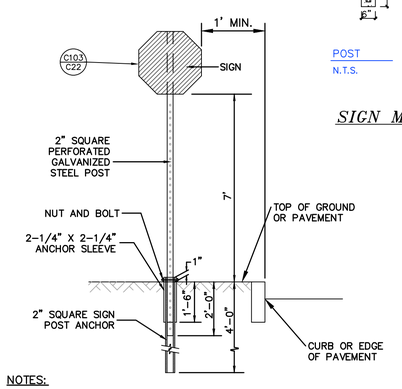


NOTES:

1. ALL SIGNAGE SHALL BE TO THE MANUAL OF UNIFORM TRAFFIC CONTROL DEVICES (MUTCD) STANDARDS AND NHDOT STANDARDS.
2. THE CONTRACTOR SHALL PROVIDE SHOP DRAWINGS/CATALOG CUTS TO THE ENGINEER FOR REVIEW AND APPROVAL PRIOR TO ERECTING SIGNS.
3. THE LOCATION OF THE SIGNS SHALL BE AS INDICATED ON THE DRAWINGS AND/OR AS DIRECTED BY THE CITY OF DOVER DEPARTMENT OF PUBLIC WORKS.

*TYPICAL SIGN POST*
(NOT TO SCALE)

## C25

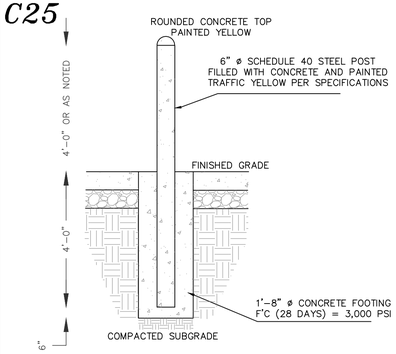


*BOLLARD DETAIL*
NOT TO SCALE

## C26

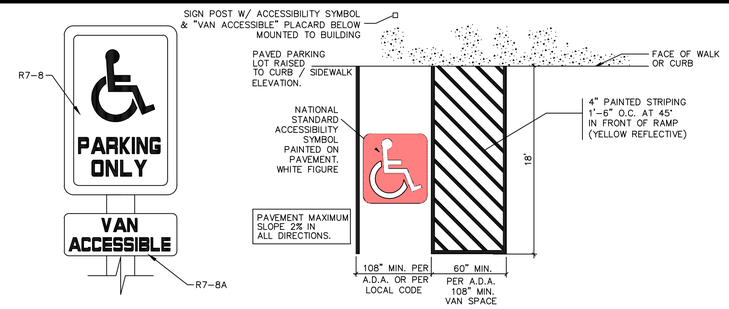


PARTIAL ELEVATION
N.T.S.

*PARKING STALL SIGNAGE FOR THE PHYSICALLY CHALLENGED*
NOT TO SCALE

DOVER PLANNING #16–31C

| REVISION | DATE | DESCRIPTION |
|---|---|---|
| #3 | 4–27–18 | REVISE PER ABUTTER COMMENT |
| #2 | 3–27–18 | REVISED PER ZONING CHANGE |
| #1 | 2–19–18 | REVISED PER TRC COMMENTS |

CONSTRUCTION DETAILS
FOR
6 GROVE STREET RESIDENCES, LLC
FOR PROPERTY LOCATED AT
6 GROVE STREET, DOVER NH
***TAX MAP 31 LOT 14***


BERRY SURVEYING & ENGINEERING
335 SECOND CROWN POINT ROAD
BARRINGTON, NH 03825 (603)332–2863


SCALE : AS SHOWN
DATE : JANUARY 18, 2018
FILE NO. : DB 2016 – 090

STATE OF NEW HAMPSHIRE – KENNETH A. BERRY No. 3243 – LICENSED PROFESSIONAL ENGINEER

**C–103**

## L1

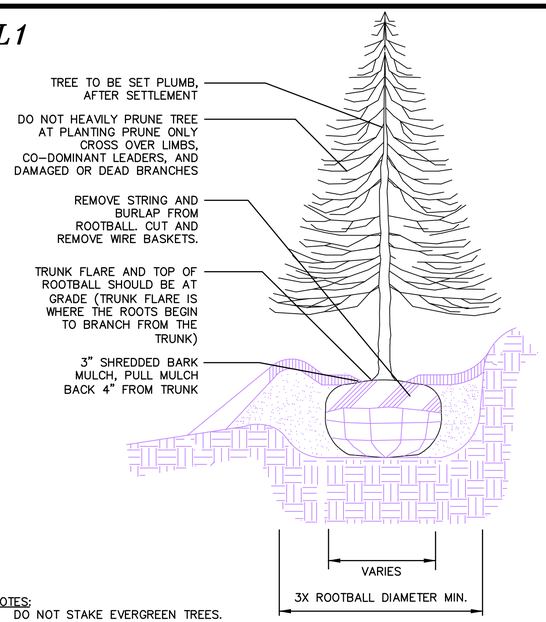


NOTES:
1. DO NOT STAKE EVERGREEN TREES.
2. LOAM FOR BACKFILLING SHALL BE AMENDED AS REQUIRED BY LANDSCAPE ARCHITECT.
3. TAMP BACKFILL SOIL AROUND ROOTBALL FIRMLY TO MINIMIZE ROOTBALL SHIFT.

EVERGREEN TREE PLANTING

## L2

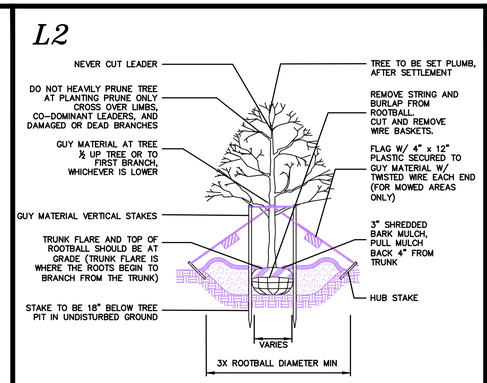


NOTES:
1. GUYING AND STAKING TO BE DETERMINED IN THE FIELD BY THE LANDSCAPE ARCHITECT. LOCAL FIELD CONDITIONS AS WELL AS PLANT CHARACTERISTICS WILL DETERMINE THE NECESSITY OF GUYING AND STAKING.
2. TYPICALLY ONLY TREES WITH A 3" OR GREATER CALIPER NEED TO BE STAKED. TREES WITH LESS THAN A 3" CALIPER NEED TO BE STAKED ONLY AS REQUIRED BY LANDSCAPE ARCHITECT.
3. ONLY WRAP TREE TRUNKS AS REQUIRED BY LANDSCAPE ARCHITECT.
4. TREE SHALL BE SET PLUMB, AFTER SETTLEMENT.
5. LOAM FOR BACKFILLING SHALL BE AMENDED AS REQUIRED BY LANDSCAPE ARCHITECT.
6. CITY TREES PLANTED ON PRIVATE PROPERTY, ADJACENT TO A PUBLIC RIGHT-OF-WAY, NEED TO BE PLANTED A MINIMUM OF 5 FEET FROM THE EDGE OF THE CITY SIDEWALK.

DECIDUOUS TREE PLANTING

## L3

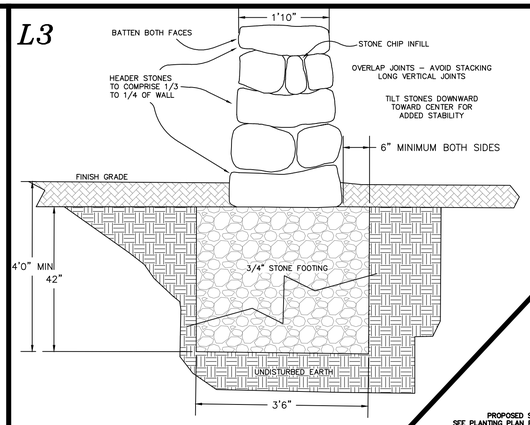


FIELD STONE MASONRY WALL DETAIL

## L4

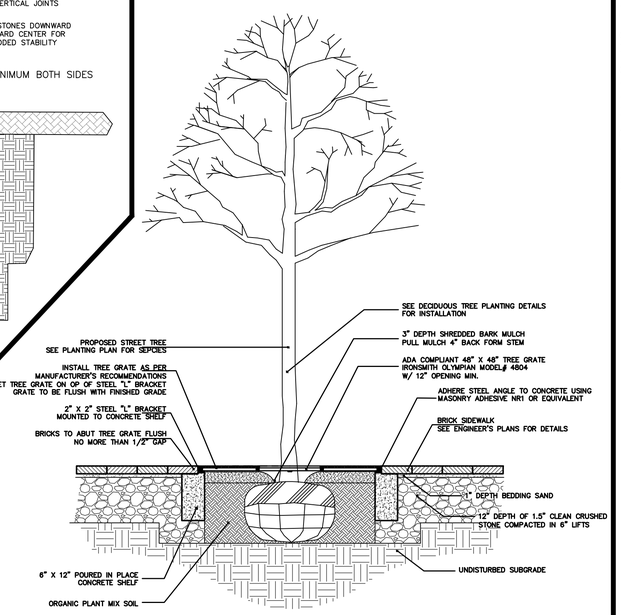


TREE GRATE DETAIL

## L5

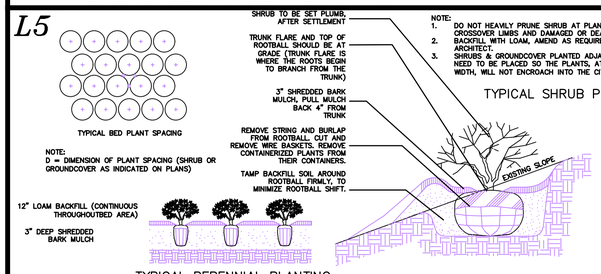


NOTE:
1. DO NOT HEAVILY PRUNE SHRUB AT PLANTING, PRUNE ONLY CROSSOVER LIMBS AND DAMAGED OR DEAD BRANCHES.
2. BACKFILL WITH LOAM, AMEND AS REQUIRED BY LANDSCAPE ARCHITECT.
3. SHRUBS & GROUNDCOVER PLANTED ADJACENT TO CITY SIDEWALK'S NEED TO BE PLACED SO THE PLANTS, AT THEIR MATURE HEIGHT & WIDTH, WILL NOT ENCROACH INTO THE CITY'S SIDEWALK.

TYPICAL SHRUB PLANTING

TYPICAL PERENNIAL PLANTING

## L6

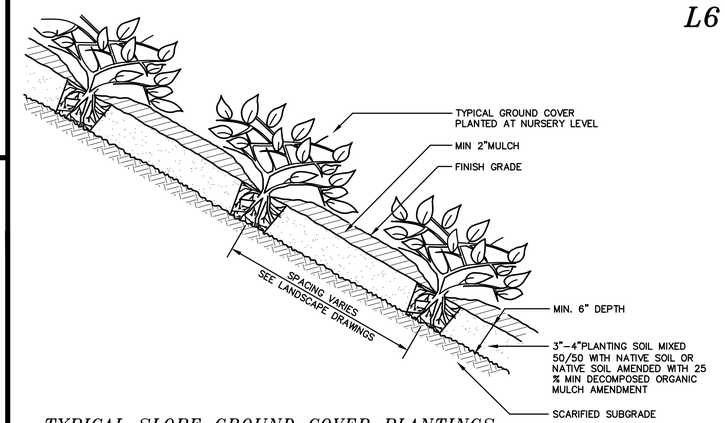


TYPICAL SLOPE GROUND COVER PLANTINGS

## L7

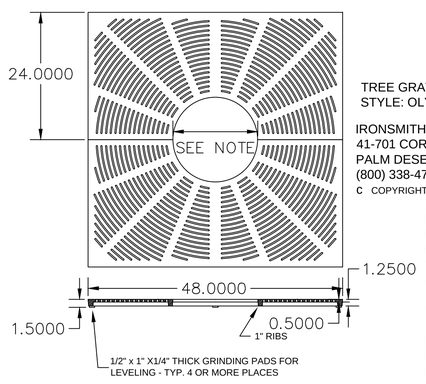


TREE GRATE #M4804
STYLE: OLYMPIAN

IRONSMITH
41-701 CORPORATE WAY, #3
PALM DESERT, CA 92260
(800) 338-4766
C COPYRIGHT

SLOT WIDTH IS 1/4" MAXIMUM, MEETS ADA COMPLIANCE.
GRATE CAST FROM GRAY IRON OR ALUMINUM
TREE OPENING SIZE. 16" , 20" OR 24"
STEEL ANGLE FRAME REQUIRED
FOR INSTALLATION USE MODEL M4800F
OUTER FRAME DIM. IS 3/4" ± 1/8" GREATER THAN GRATE.

SIDE WALK TREE WELL
(NOT TO SCALE)

This drawing embodies a confidential proprietary design of IRONSMITH Palm Desert, CA. All design, manufacturing, reproduction, use, sale, and other rights regarding the same are expressly reserved. This drawing is submitted under confidential relationship for a specific purpose and the recipient agrees by accepting this drawing not to supply or disclose any information regarding it to any unauthorized person or to incorporate any special feature peculiar to this design in other projects. The information disclosed in this drawing may be covered completely or in part by patents pending. Designers may incorporate this drawing in their plans for the purpose of showing design intent. This drawing is not to be used for the purpose of product production.

## L8

MATERIALS LIST
(1) TUBING – ø 2 3/8" x .154" Wall Steel Tubing

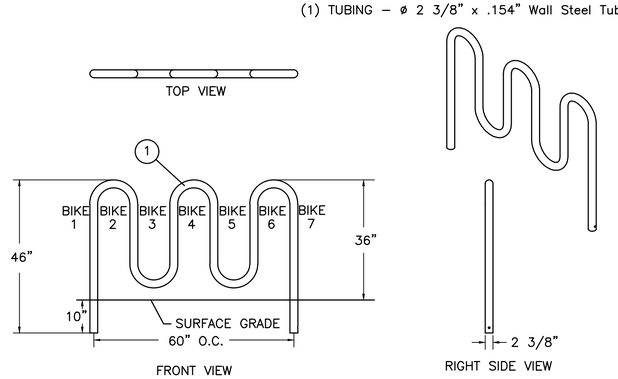


BIKE RACK
(NOT TO SCALE)

## L9

Scarborough™
Product Drawing
www.landscapeforms.com
Date: 5/19/2010
Ph: 800.521.2546

BENCH DETAIL
(NOT TO SCALE)

BIN DETAIL
(NOT TO SCALE)

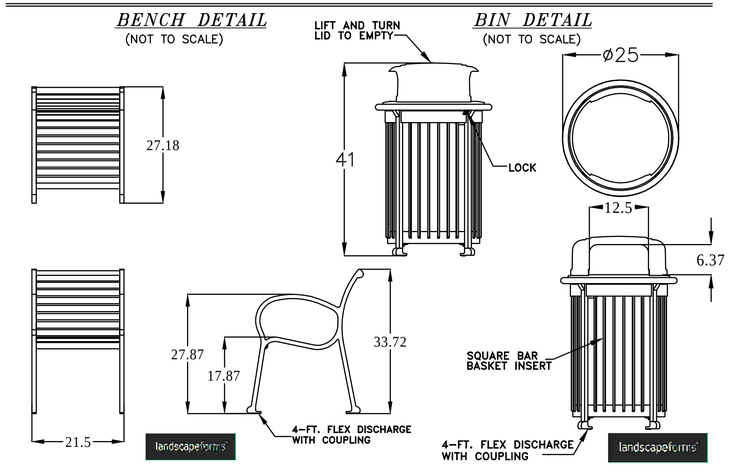


CONFIDENTIAL DRAWING INFORMATION CONTAINED HEREIN IS THE PROPERTY OF LANDSCAPE FORMS, INC. INTENDED USE IS LIMITED TO DESIGN PROFESSIONALS SPECIFYING LANDSCAPE FORMS, INC. PRODUCTS AND THEIR DIRECT CLIENTS. DRAWING IS NOT TO BE COPIED OR DISCLOSED TO OTHERS WITHOUT THE CONSENT OF LANDSCAPE FORMS, INC. ©2013 LANDSCAPE FORMS, INC. ALL RIGHTS RESERVED.

NOTES:
1. DUCTILE IRON CASTINGS COME WITH A TEN YEAR WARRANTY AGAINST BREAKAGE.
2. DRAWING NOT TO SCALE. DO NOT SCALE DRAWINGS.
3. ALL FABRICATED METAL COMPONENTS ARE STEEL SHOTBLASTED, ETCHED, PHOSPHATIZED, PREHEATED, AND ELECTROSTATICALLY POWDER-COATED WITH T.G.I.C. POLYESTER POWDER COATINGS. PRODUCTS ARE FULLY CLEANED AND PRETREATED, PREHEATED AND COATED WHILE HOT TO FILL CREVICES AND BUILD COATING FILM. COATED PARTS ARE THEN FULLY CURED TO COATING MANUFACTURER'S SPECIFICATIONS. THE THICKNESS OF THE RESULTING FINISH COAT AVERAGES 8–10 MILS (200–250 MICRONS).
4. IT IS NOT RECOMMENDED TO LOCATE ANCHOR BOLTS UNTIL BENCH IS IN PLACE. THIS LANDSCAPE FORMS, INC. PRODUCT MUST BE PERMANENTLY AFFIXED TO THE GROUND. CONSULT YOUR LOCAL CODES FOR REGULATIONS.
5. ANCHOR BOLTS NOT PROVIDED BY VICTOR STANLEY, INC.
7. ALL SPECIFICATIONS ARE SUBJECT TO CHANGE. CONTACT MANUFACTURER FOR DETAILS.
8. THIS PRODUCT IS SHIPPED FULLY ASSEMBLED.

OR APPROVED EQUAL AS APPROVED BY THE DESIGN ENGINEER AND THE DIRECTOR OF PLANNING

L–101

DOVER PLANNING #16–31C

| REVISION | DATE | DESCRIPTION |
|---|---|---|
| #3 | 4–27–18 | REVISE PER ABUTTER COMMENT |
| #2 | 3–27–18 | REVISED PER ZONING CHANGE |
| #1 | 2–19–18 | REVISED PER TRC COMMENTS |

LANDSCAPING DETAILS
FOR
6 GROVE STREET RESIDENCES, LLC
FOR PROPERTY LOCATED AT
6 GROVE STREET, DOVER NH
*TAX MAP 31, LOT 14*

BERRY SURVEYING & ENGINEERING
335 SECOND CROWN POINT ROAD
BARRINGTON, NH 03825 (603)332–2863

SCALE : AS SHOWN
DATE : JANUARY 18, 2018
FILE NO. : DB 2016 – 090

STATE OF NEW HAMPSHIRE – KENNETH A. BERRY No. 14147 – LICENSED – PROFESSIONAL ENGINEER

## U1

1.) SEE DETAILS FOR SERVICE CONNECTION REQUIREMENTS

2.) SERVICE CONNECTION SHALL BE INSTALLED BELOW WATER MAIN WHERE POSSIBLE.

3.) CLEANOUTS SHALL BE INSTALLED INSIDE EACH BUILDING EXIT POINT

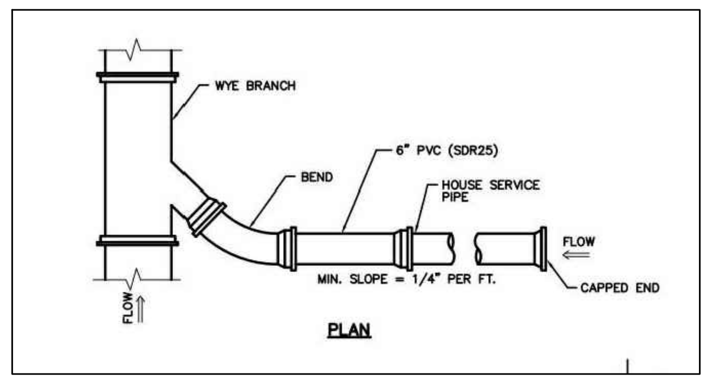


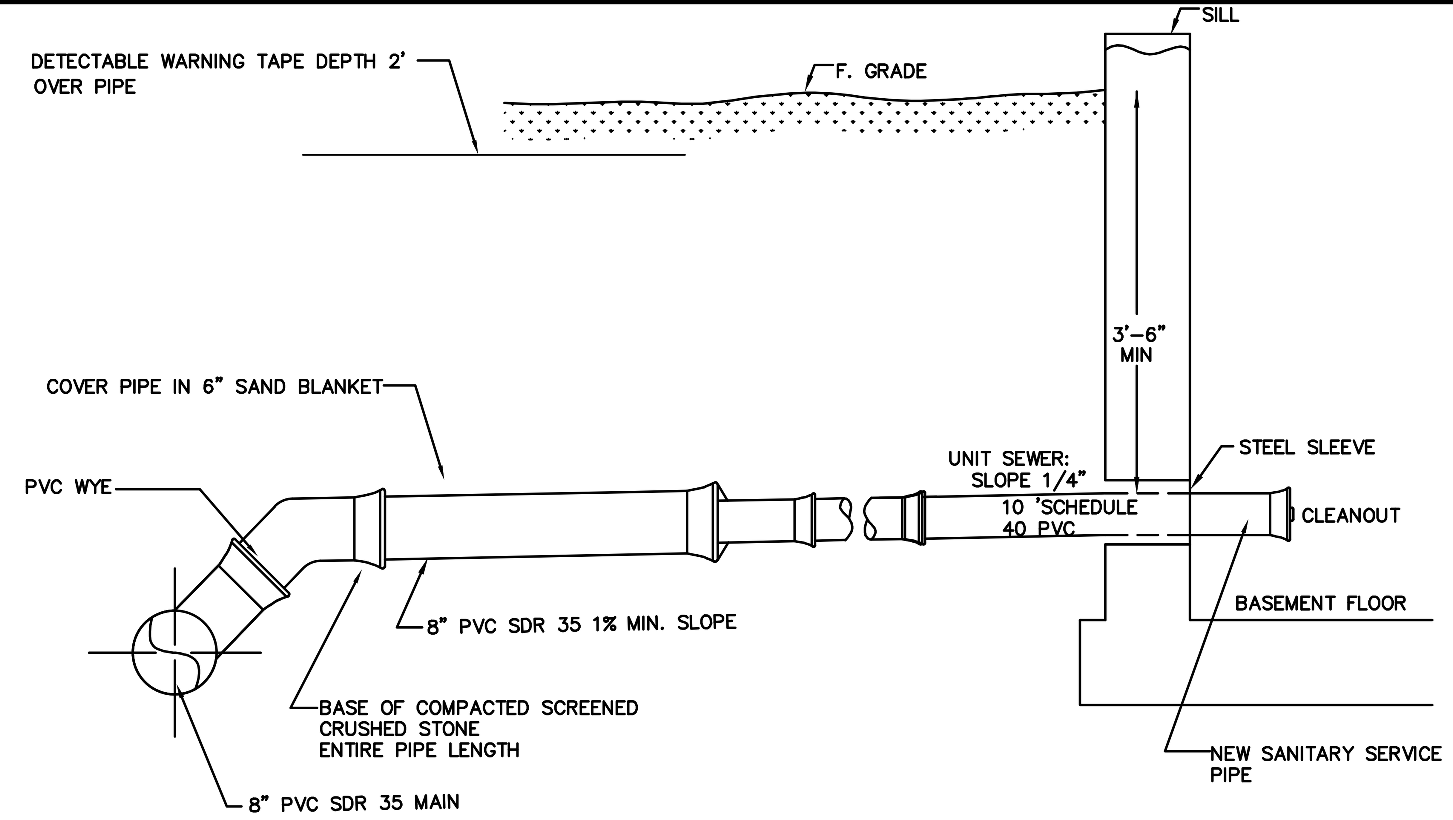


*DETAIL OF UNIT SEWER SERVICE*

NOT TO SCALE

## U2

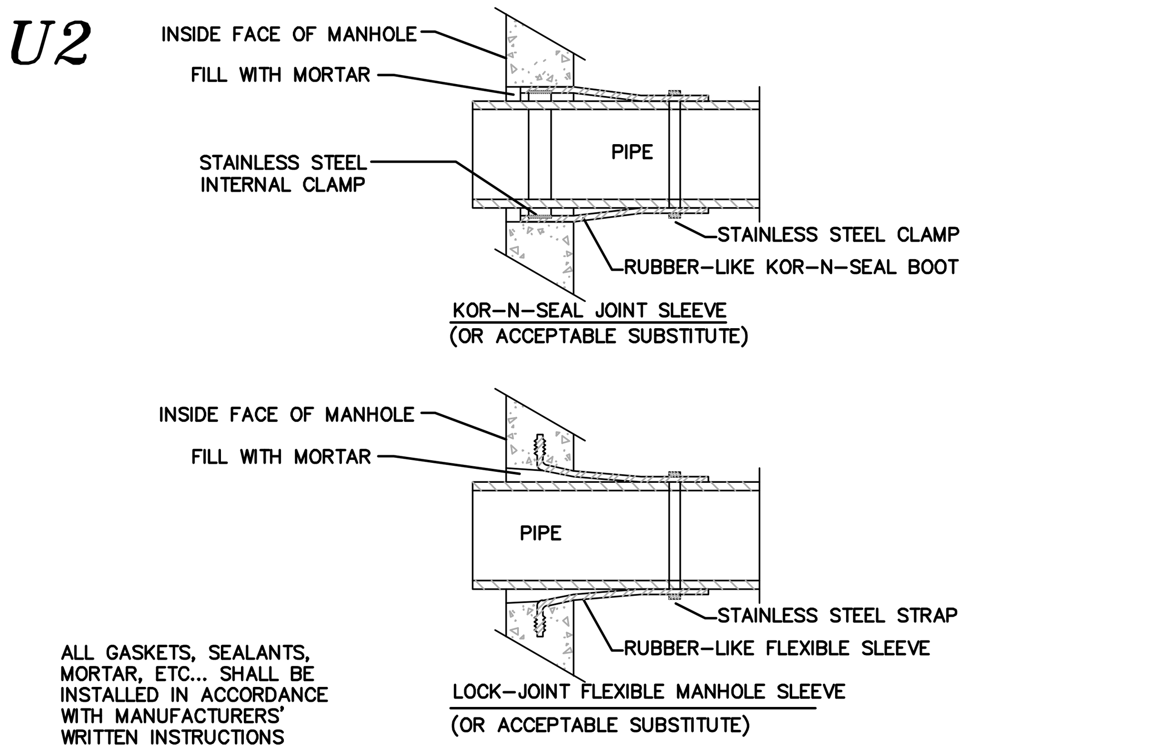


*DETAIL "A" - PIPE TO MANHOLE JOINTS*

NOT TO SCALE

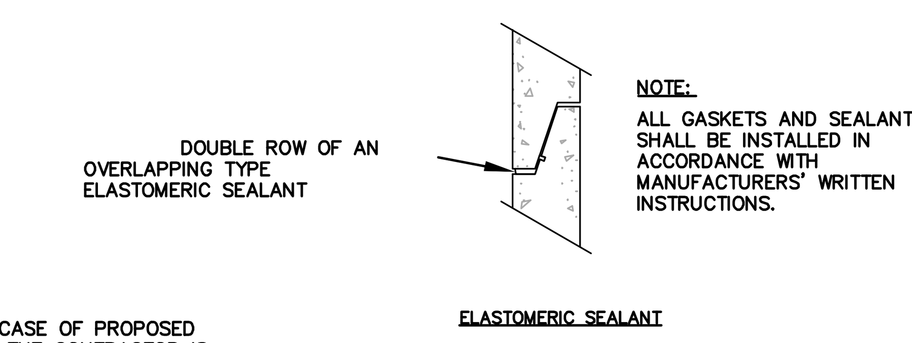


IN THE CASE OF PROPOSED SMH 1A THE CONTRACTOR IS TO FERNCO THE EXISTING V.C. PIPE TO THE PROPOSED SDR 35 STUBS WITHIN THE BASIN.

*DETAIL "B" HORIZONTAL JOINTS*

NOT TO SCALE

## U3

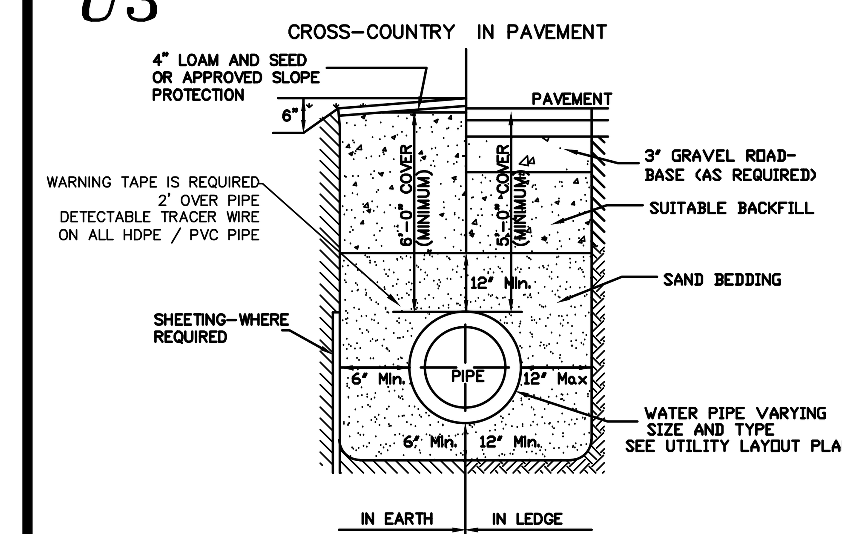


*TYPICAL TRENCH DETAIL FOR WATER SYSTEM*

NOT TO SCALE

## U7

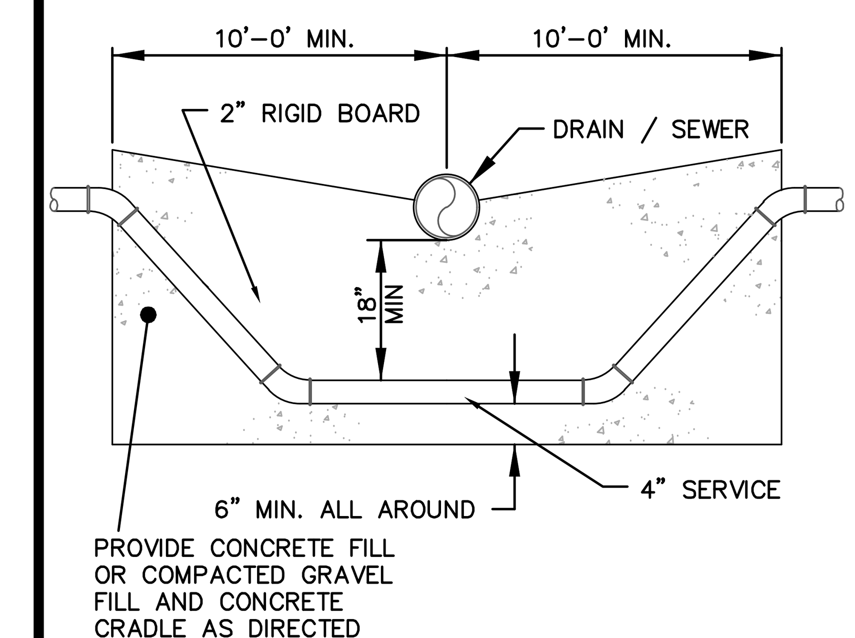


*WATER MAIN INSTALLATION - BELOW DRAIN / SEWER*

NOT TO SCALE

## U4

NOTES ON MANHOLE CONSTRUCTION:

1) IT IS THE INTENTION THAT THE MANHOLE, INCLUDING ALL COMPONENT PARTS, HAVE ADEQUATE SPACE, STRENGTH AND LEAKPROOF QUALITIES CONSIDERED NECESSARY FOR THE INTENDED SERVICE. SPACE REQUIREMENTS AND CONFIGURATIONS, SHALL BE AS SHOWN ON THE DRAWING. MANHOLES SHALL BE AN ASSEMBLY OF PRECAST SECTIONS, WITH STEEL REINFORCEMENT AND ADEQUATE JOINTING. THE COMPLETE STRUCTURE SHALL BE OF SUCH MATERIAL AND QUALITY AS TO WITHSTAND HS-20-44 LOADING, INCLUDING THE COVER. ALL SMH CONSTRUCTION AND MATERIALS WILL BE IAW ENV.-WQ 704.13 ADOPTED OCTOBER 15, 2014

2) BARRELS AND CONE SECTIONS SHALL BE PRECAST REINFORCED CONCRETE. (IAW ENV.-WQ 704.12 (d))

3) SEWER MANHOLE DIAMETER SHALL BE AS INDICATED ON THE PLANS.

4) PRECAST CONCRETE BARREL SECTIONS, CONES AND BASES SHALL CONFORM TO ASTM C478.

5) GRAVITY SEWER PIPE TESTING WILL BE IN ACCORDANCE WITH ENV.-WQ 704.06 AND MAN HOLE TESTING IAW ENV.-WQ 704.17 DATED OCTOBER 15, 2014.

6) INVERTS AND SHELVES: MANHOLES SHALL HAVE A BRICK PAVED SHELF AND INVERT, CONSTRUCTED TO CONFORM TO THE SIZE OF THE PIPE AND FLOW. INVERT BRICKS SHALL BE LAID ON EDGE AND THE BASE SECTION SHALL BE FULL. AT CHANGES IN DIRECTIONS, THE INVERTS SHALL BE LAID OUT IN CURVES OF THE LONGEST RADIUS POSSIBLE TANGENT TO THE CENTER LINE OF THE SEWER PIPES. CARE SHALL BE TAKEN TO ENSURE THAT THE BRICK INVERT IS A SMOOTH CONTINUATION OF THE SEWER INVERT. SHELVES SHALL BE CONSTRUCTED TO THE ELEVATION OF THE HIGHEST PIPE CROWN AND SLOPE TO DRAIN TOWARD THE FLOWING THROUGH CHANNEL. UNDERLAYMENT OF INVERT AND SHELF SHALL CONSIST OF BRICK MASONRY. (IAW ENV.-WQ 704.13 (a) (9)), MORTAR SHALL CONFORM WITH REQUIREMENTS OF IAW ENV.-WQ 704.13 (c).

7) FRAMES AND COVERS: MANHOLES FRAMES AND COVERS SHALL BE OF HEAVY DUTY DESIGN AND PROVIDE A 30-INCH CLEAR OPENING. 3-INCH (MINIMUM HEIGHT) LETTERS WITH THE WORD "SEWER" SHALL BE PLAINLY CAST INTO THE CENTER OF EACH MANHOLE COVER. (IAW ENV.-WQ 704.13 (a) (4-6)) SEWER MAN HOLE COVERS ARE TO PAMREX.

8) SHALLOW MANHOLE: IN LIEU OF A CONE SECTION, WHEN MANHOLE DEPTH IS LESS THAN 6 FEET, A REINFORCED CONCRETE SLAB COVER MAY BE USED HAVING AN ECCENTRIC ENTRANCE OPENING AND CAPABLE OF SUPPORTING H-20 LOADS.

9) HORIZONTAL JOINTS BETWEEN SECTIONS OF PRECAST CONCRETE BARRELS SHALL BE OF A TYPE APPROVED BY THE DOVER DPW, WHICH TYPE SHALL, IN GENERAL, DEPEND FOR WATERTIGHTNESS UPON A DOUBLE ROW OF AN OVERLAPPING TYPE ELASTOMERIC OR MASTIC-LIKE GASKET. APPROVED ELASTOMERIC SEALANTS ARE: RAM-NEK, KENT SEAL NO. 2, EZ, OR EQUAL.

10) IN CROSS COUNTRY AREAS OUTSIDE OF THE PAVED ROADWAY SURFACE, THE MANHOLE FRAME ELEVATION SHALL BE A MINIMUM OF 6" ABOVE FINISHED GRADE. GRADE TO PROVIDE POSITIVE DRAINAGE AWAY FROM THE MANHOLE. SEE TYPICAL TRENCH DETAIL ON SHEET D-102.

11.) ALL FRAMES AND GRATES ARE TO BE U.S.A. MADE. MANHOLE STEPS ARE REQUIRED IN THIS MUNICIPALITY AND MUST CONFORM TO THE REQUIREMENTS OF ENV-WQ 704.14.

12.) THE CONTRACTOR TO WORK WITH CITY OF DOVER REVIEW ENGINEER AND SEWER DEPARTMENT ON THE MEANS AND METHODS USED TO INSTALL ALL SEWER STRUCTURES. SPECIFIC ATTENTION IS TO BE PAID TO THE INSTALLATION OF SMH 1A, WHEREAS THE EXISTING PIPE SLOPE IS UNKNOWN. DURING LOW FLOW CONDITIONS, CUT AND TEMPORARILY CAP THE EXISTING 8" VC LINE, OR INSTALL TEMPORARY BY-PASS LINE (OF EQUAL SIZE). AFTER INSTALLATION OF NEW BASIN, FERNCO THE NEW SDR 35 PIPES TO THE EXISTING VC LINES. THIS INSTALLATION IS TO BE COORDINATED WITH THE CITY OF DOVER SEWER DEPARTMENT.

13.) ANY WORK INVOLVING THE CUTTING INTO THE EXISTING A.C. PIPE SHALL MEET THE REQUIREMENTS OF ENV-A 1800.

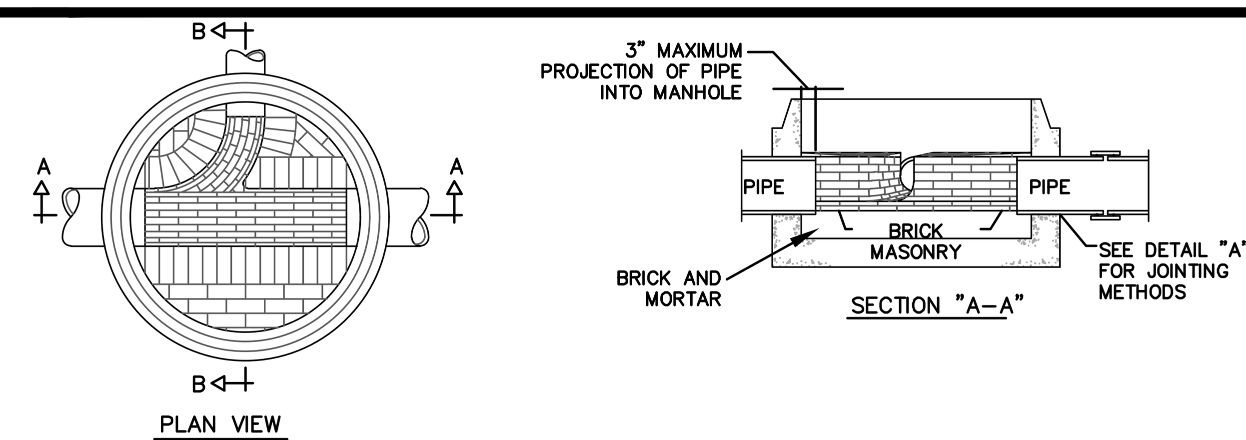


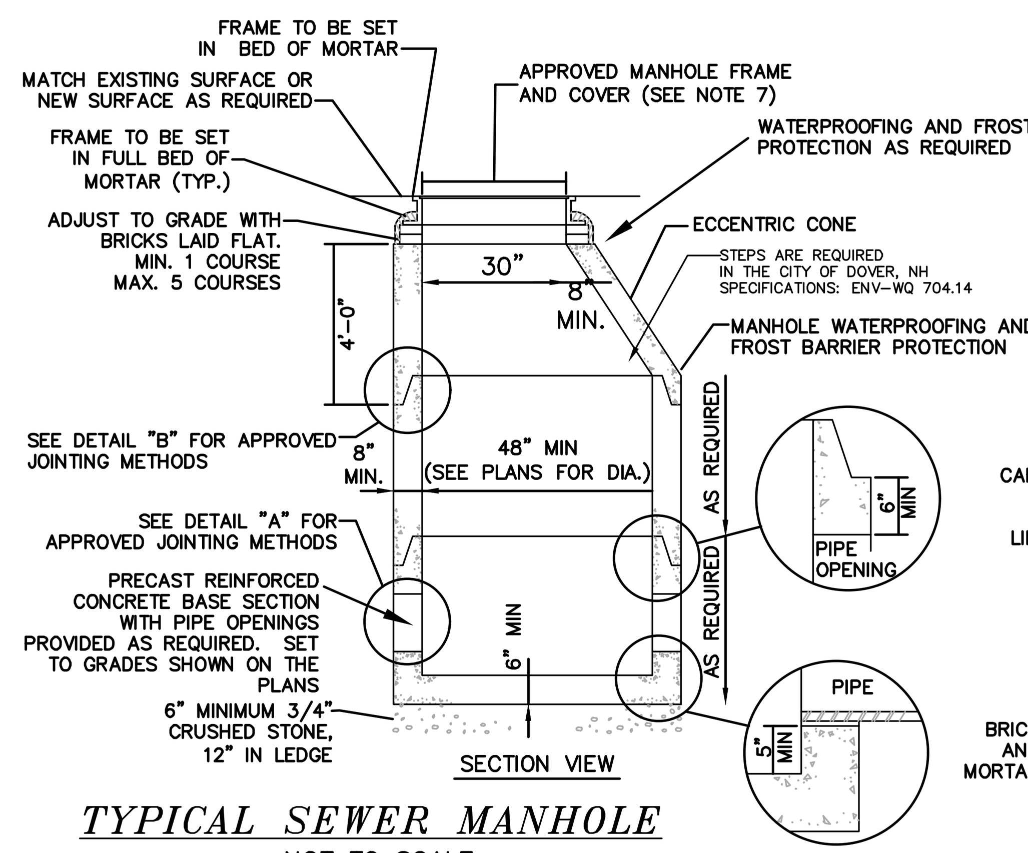


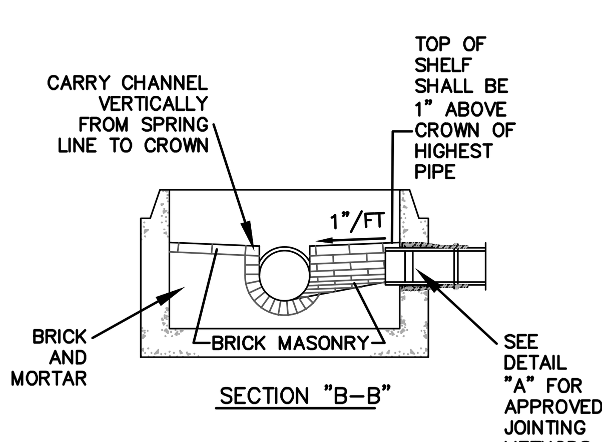


*TYPICAL SEWER MANHOLE*

NOT TO SCALE

## U8

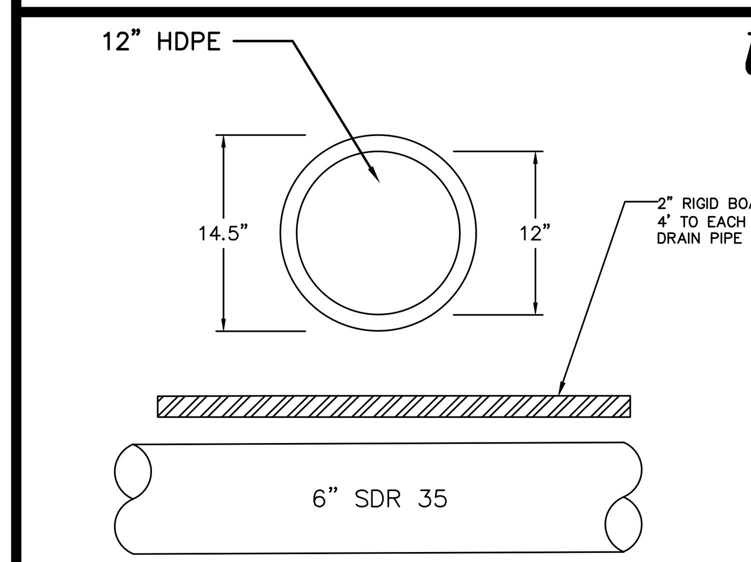


CROSS SECTION A-A

*SEWER AND DRAIN CROSSING*

NOT TO SCALE

## U5

SEE ALSO TYPICAL SEWER AND DRAINAGE TRENCH DETAIL, SHEET D-101, DETAIL D6

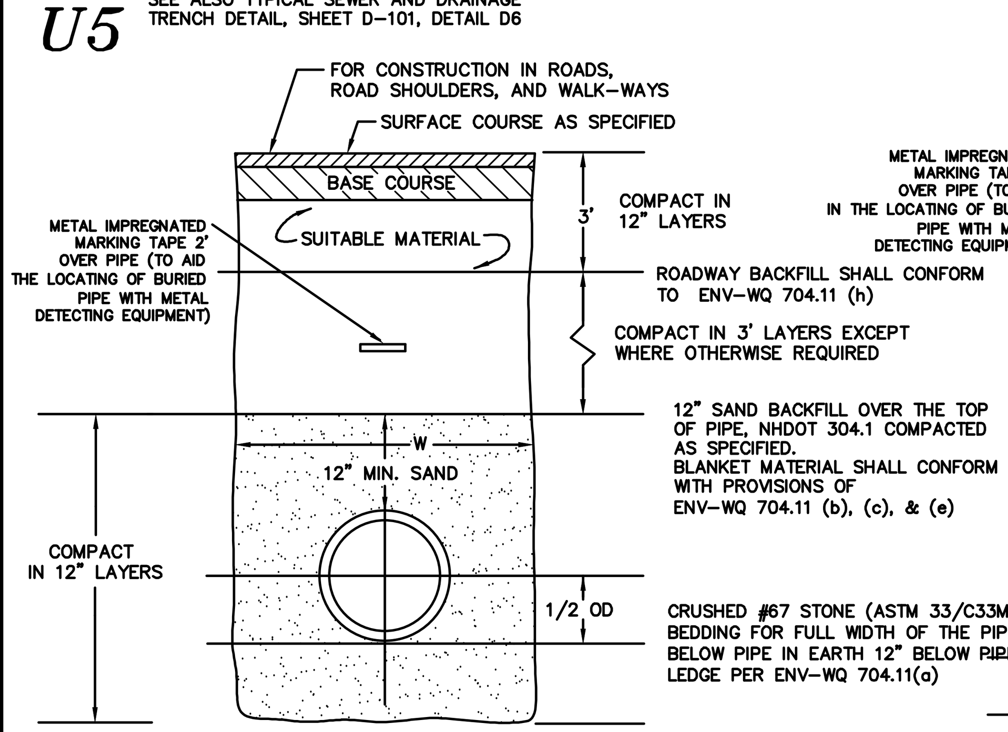


*LEDGE CONSTRUCTION*

NOT TO SCALE

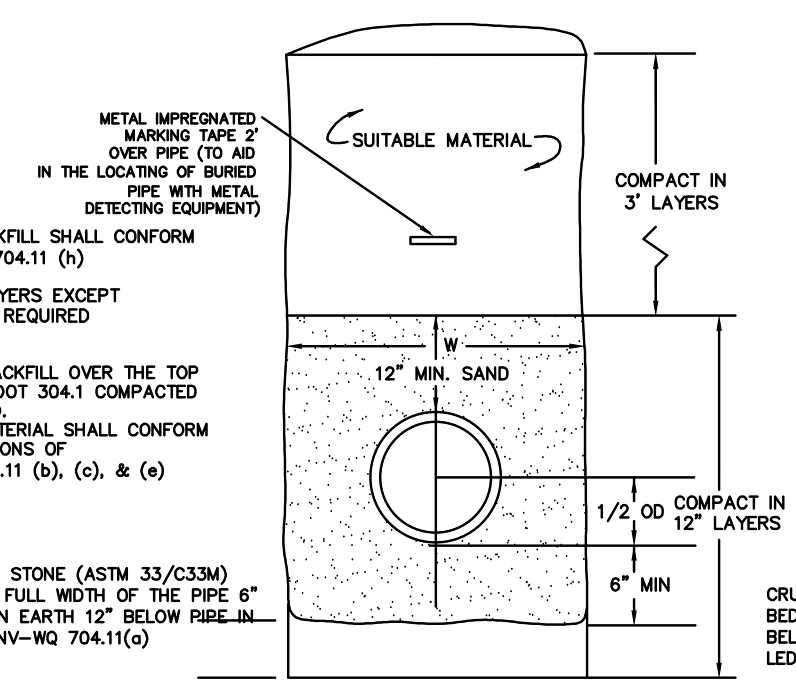


*EARTH CONSTRUCTION*

NOT TO SCALE

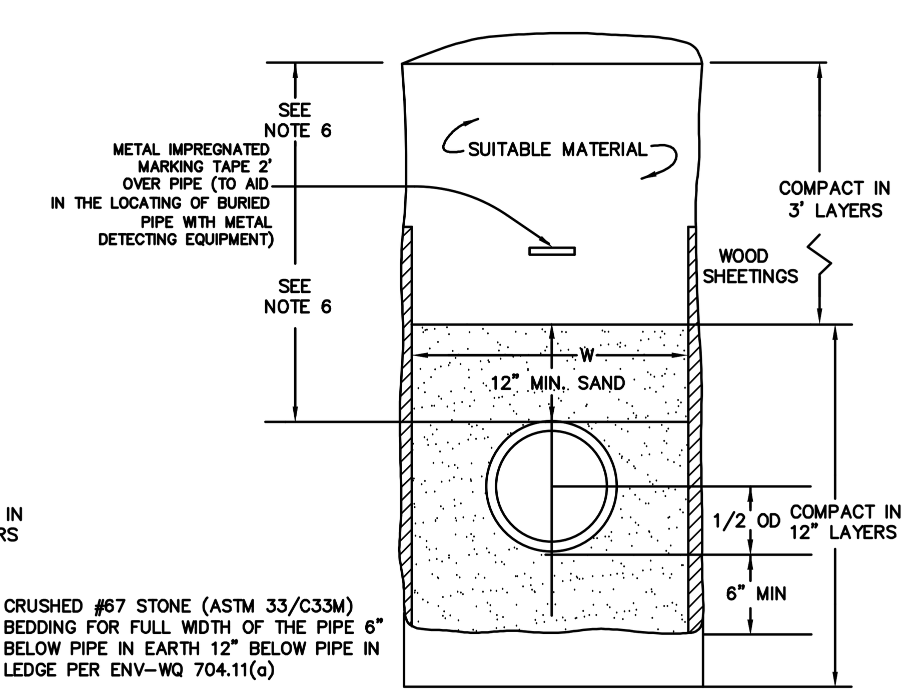


*EARTH CONSTRUCTION WITH SHEETING*

NOT TO SCALE

## U6

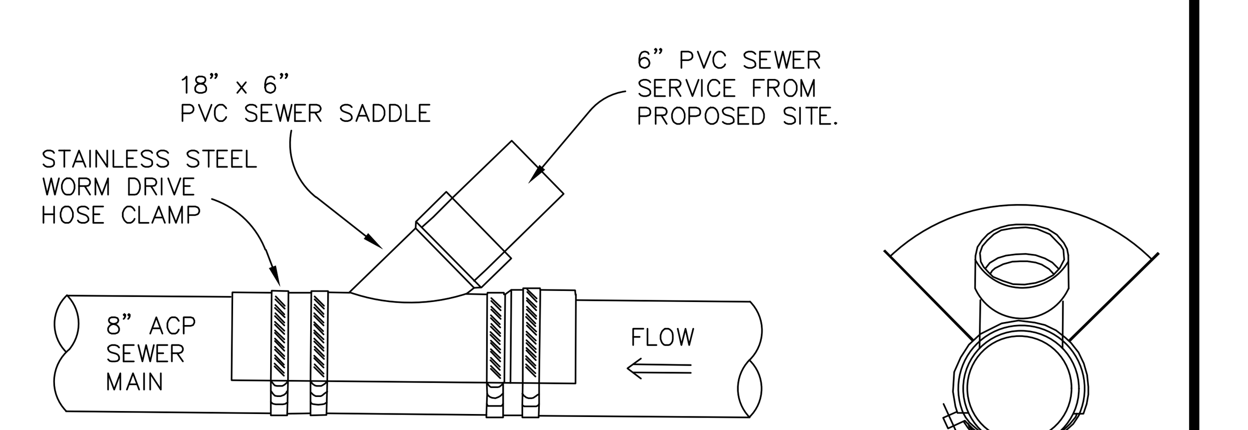


*SEWER SADDLE DETAIL*

NOT TO SCALE

DOVER PLANNING #16-31C

| REVISION | DATE | DESCRIPTION |
|---|---|---|
| #3 | 4-27-18 | REVISE PER ABUTTER COMMENT |
| #2 | 3-27-18 | REVISED PER ZONING CHANGE |
| #1 | 2-19-18 | REVISED PER TRC COMMENTS |

UTILITY DETAILS
FOR
6 GROVE STREET RESIDENCES, LLC
FOR PROPERTY LOCATED AT
6 GROVE STREET, DOVER NH
***TAX MAP 31 LOT 14***

BERRY SURVEYING & ENGINEERING
335 SECOND CROWN POINT ROAD
BARRINGTON, NH 03825 (603)332-2863

SCALE : AS SHOWN
DATE : JANUARY 18, 2018
FILE NO. : DB 2016 - 090

STATE OF NEW HAMPSHIRE - KENNETH A. BERRY No. 14243 LICENSED - PROFESSIONAL ENGINEER

*U-101*

SHEET 20 OF 21

## U9

SEPERATION NOTES:

1. WATER MAIN SHALL BE IN ACCORDANCE WITH THE "RECOMMENDED STANDARDS FOR WATER WORKS" SO-CALLED TEN STATE STANDARDS AND NEW HAMPSHIRE WATER SUPPLY AND POLLUTION CONTROL DESIGN STANDARDS.
2. WATER MAINS SHALL BE LAID AT LEAST 10 FEET HORIZONTALLY FROM ANY EXISTING OR PROPOSED SEWERS. THE DISTANCE SHALL BE MEASURED EDGE TO EDGE. IF THIS DISTANCE CANNOT BE OBTAINED, THEN THE PIPES SHALL BE INSTALLED IN A SEPERATE TRENCH AT AN ELEVATION SO THE BOTTOM OF THE WATER MAIN IS AT LEAST 18 INCHES ABOVE THE TOP OF THE SEWER.

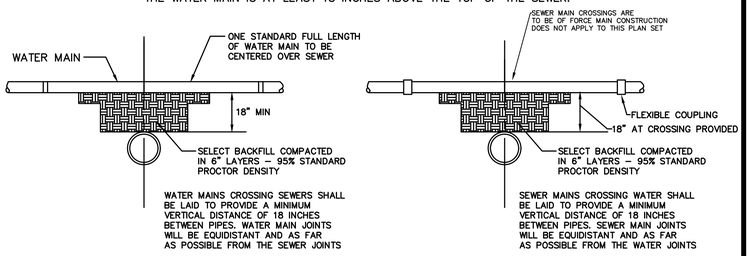


WATER MAIN ABOVE SEWER — WATER MAIN BELOW SEWER

*TYPICAL WATER/SEWER SEPERATION DETAILS*

NOT TO SCALE

## U10

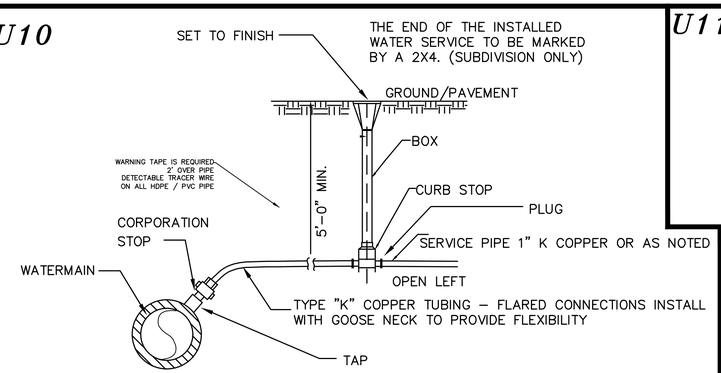


*TYPICAL WATER SERVICE CONNECTION*

NOT TO SCALE

## U11

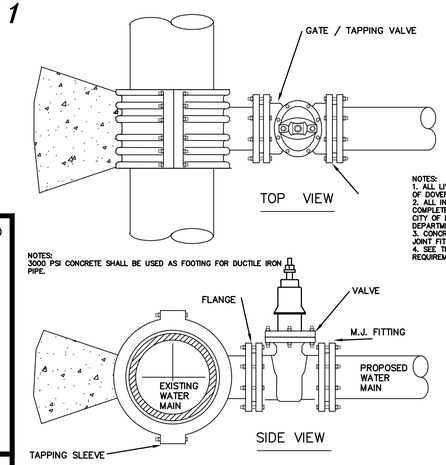


*DETAIL FOR STANDARD TAPPING SLEEVE AND VALVE ASSEMBLY*

NOT TO SCALE

## U12

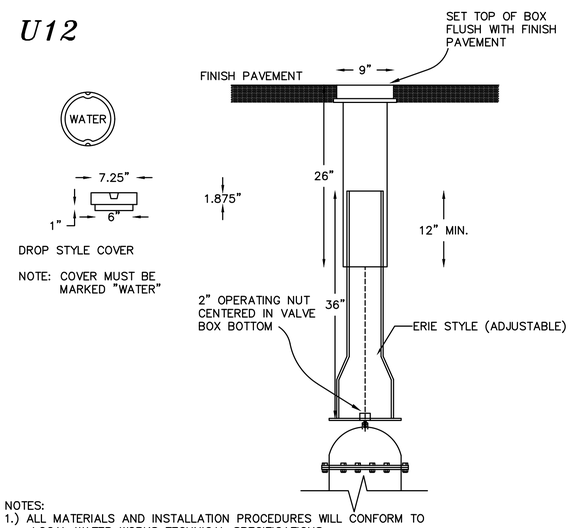


NOTES:
1.) ALL MATERIALS AND INSTALLATION PROCEDURES WILL CONFORM TO LOCAL WATER WORKS TECHNICAL SPECIFICATIONS.

2.) ALL PIPE SHOULD HAVE A MINIMUM DEPTH OF 6' FROM TOP OF PIPE TO FINISH GRADE.

*VALVE BOX DETAIL*

NOT TO SCALE

## U13

NOTES:

HYDRANTS SHALL BE SELF-DRAINING, NON-FREEZING, COMPRESSION TYPE WITH 2-3/16" MAIN VALVE OPENING. INLET CONNECTION SHALL BE 4" MJ. OUTLET SHALL BE 2" IP.

HYDRANTS SHALL HAVE A 3" DUCTILE IRON PIPE RISER WITH A CAST IRON TOP STOCK, AND NON-TURNING OPERATING ROD. PRINCIPAL INTERIOR OPERATING PARTS SHALL BE BRASS AND REMOVABLE FROM THE HYDRANT FOR SERVICING WITHOUT EXCAVATING THE HYDRANT.

HYDRANTS SHALL BE SET IN 4 CUBIC FEET OF CRUSHED STONE TO ALLOW FOR PROPER DRAINAGE OF THE HYDRANT. RECOMMENDATIONS OF THE AWWA SHOULD BE FOLLOWED WHEN INSTALLING THE HYDRANT.

POST HYDRANTS SHALL BE ECLIPSE NO. 2 POST HYDRANTS, 3-INCH MECHANICAL JOINT, AS MANUFACTURED BY JOHN C. KUPFERLE FOUNDRY COMPANY, ST. LOUIS, MISSOURI.

POST HYDRANTS ARE NON-STOCK AND ARE ORDERED AS NEEDED. PLEASE PLAN INSTALLATION ACCORDINGLY.

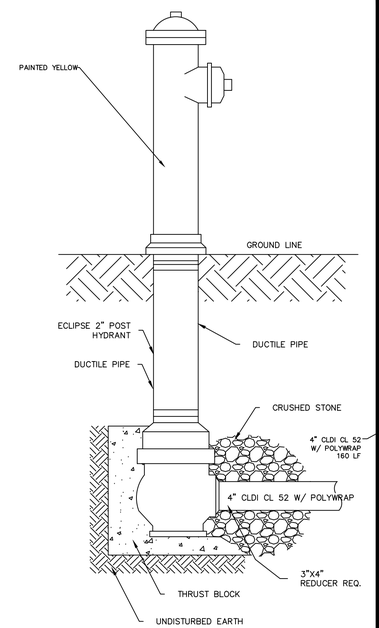


*POST HYDRANT DETAIL*

NOT TO SCALE

## U16

*TYPICAL THRUST BLOCKS*

NOT TO SCALE

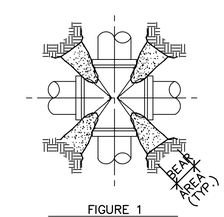


FIGURE 1
CROSS
(ONLY REQ'D IF ANY LEG IS LESS THAN 60 FT. LONG)

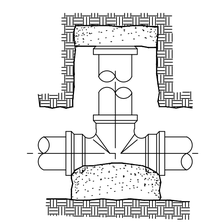

FIGURE 2
TEE, PLUG OR CAP

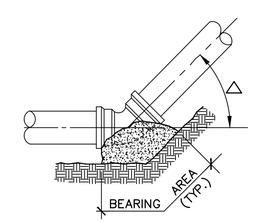


FIGURE 3
HORIZONTAL OR UPWARD VERTICAL BEND

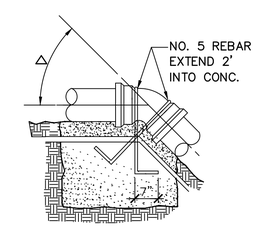


FIGURE 4
DOWNWARD VERTICAL BEND

GENERAL NOTES:

1. ALL FITTINGS & EXPOSED REBAR TO BE WRAPPED W/ TWO LAYERS OF 6 MIL. POLYETHYLENE WHERE COVERED WITH CONCRETE.
2. ALL CONCRETE SHALL BE CLASS C 3000 P.S.I. MINIMUM 28 DAYS COMPRESSIVE STRENGTH.
3. PLACE CONCRETE AGAINST UNDISTURBED EARTH.
4. TABLE DENOTES MINIMUM BEARING AREA OR VOLUME OF THRUST BLOCK. SPECIAL DESIGN FOR EACH INSTALLATION IS REQUIRED IF ALLOWABLE SOIL BEARING CAPACITY IS LESS THAN 3000 P.S.F.
5. VERTICAL SURFACES NOT BEARING AGAINST UNDISTURBED EARTH SHALL BE FORMED.
6. KEEP CONCRETE AWAY FROM FLANGE BOLTS AND FITTINGS.

| PIPE I.D. | BEARING AREA, SQUARE FEET | | | | | | VOLUME OF CONC. CU.YD | | |
|---|---|---|---|---|---|---|---|---|---|
| | FIGURE 1 | FIGURE 2 | FIGURE 3, △ | | | | FIGURE 4, △ | | |
| | | | 90° | 45° | 22-1/2° | 11-1/4° | 45° | 22-1/2° | 11-1/4° |
| 4" | 2 | 2 | 2 | 1 | 1 | 1 | 1.0 | .5 | .5 |
| 6" | 2 | 3 | 3 | 2 | 1 | 1 | 1.5 | 1.0 | .5 |
| 8" | 2 | 5 | 6 | 3 | 2 | 1 | 2.0 | 1.0 | .5 |
| 10" | 3 | 7 | 10 | 5 | 3 | 1 | 4.0 | 2.0 | 1.0 |
| 12" | 3 | 10 | 14 | 8 | 4 | 2 | | | |
| 14" | 4 | 14 | 20 | 10 | 5 | 3 | | | |
| 16" | 4 | 20 | 24 | 12 | 7 | 4 | | | |
| 18" | 5 | 24 | 30 | 16 | 10 | 5 | | | |
| 20" | 5 | 28 | 40 | 20 | 12 | 6 | | | |

NOTE:

MECHANICAL JOINTS AT ALL FITTINGS IE: BENDS, TEES, CROSSES, AND VALVES SHALL BE THRUST RESTRAINT. (MEGA-LUG OR APPROVED EQUAL).

## U14

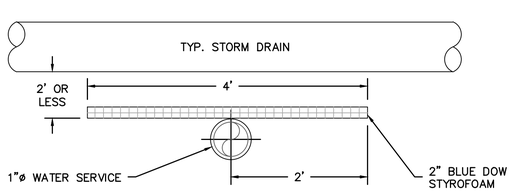


*INSULATE WATER PIPE WHERE CROSSING UNDER CULVERT*

NOT TO SCALE

## U15

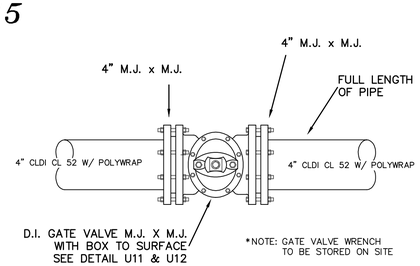


*SHUTOFF VALVE DETAIL*

NOT TO SCALE

DOVER PLANNING #16-31C

| REVISION | DATE | DESCRIPTION |
|---|---|---|
| #3 | 4-27-18 | REVISE PER ABUTTER COMMENT |
| #2 | 3-27-18 | REVISED PER ZONING CHANGE |
| #1 | 2-19-18 | REVISED PER TRC COMMENTS |

UTILITY DETAILS
FOR
6 GROVE STREET RESIDENCES, LLC
FOR PROPERTY LOCATED AT
6 GROVE STREET, DOVER NH
***TAX MAP 31 LOT 14***


BERRY SURVEYING & ENGINEERING
335 SECOND CROWN POINT ROAD
BARRINGTON, NH 03825 (603)332-2863


AS MARKED
DATE : JANUARY 18, 2018
FILE NO. : DB 2016 – 090

STATE OF NEW HAMPSHIRE
KENNETH A. BERRY
No. 7420
LICENSED
PROFESSIONAL ENGINEER

**U-102**

| CITY OF DOVER | PLANNING BOARD - STAFF MEMO FILE #18-18 |
|---|---|
| | Application Type: Minor Lot Line Adjustment for Review<br>Applicant(s): Bean Family Trust<br>Owner(s): Been Family Trust, Daniel P. Irish and Kristopher & Elizabeth M. Reischer<br>Location: 12, 22, & 32 Olive Meadow Lane (Assessor's Map A, Lots 45-2, 45A-2-1 & 45A-2-3)<br>Meeting Date: Tuesday, May 8, 2018 |

**INTENT:** To adjust the property boundaries between Map A, Lot 45-2 and 45A-2-1 and between Map A, Lot 45-2 and 45A-2-3

**LOTS/UNITS PROPOSED:** N/A

**AGENDA ITEM #:** 4-D

**FILE:** P18-18

**APPLICANT(S):** Bean Family Trust

**OWNER(S):** Been Family Trust, Daniel P. Irish and Kristopher & Elizabeth M. Reischer

**LOCATION:** 12, 22, & 32 Olive Meadow Lane. Assessor's Map A, Lots 45-2, 45A-2-1 & 45A-2-3

**ACREAGE:** Lot 45-2: Decreasing from 2.7 ac (117,546 sq. ft.) to 2.16 ac (105,810 sq. ft.). Lot 45A-2-1: Increasing from .467 ac (20,335 sq. ft.) to.56 ac (24,239 sq. ft.) and Lot 45A-2-3: Increasing from .528 ac (22,999 sq. ft.) to .71ac (30,827 sq. ft.)

**ZONING DISTRICT:** Rural Residential District (R-40)

**EXISTING LAND USE:** Residential,

**PROPOSED LAND USE:** Same as Existing

**SURROUNDING LAND USE:** Residential, Assembly Hall

**ZBA ACTION:** None

**ATTACHMENTS:**

**PERMITS REQUIRED:** None

**WAIVERS REQUESTED:** None

**Summary of Request and Background**

The applicant proposes to adjust the lot lines for three lots. Lot 45-2 is adjusting common lot lines with Lot 45A-2-1 and with Lot 45A-2-3. Lot 45A-2-1 will increase from .467 ac to .56 ac. Lot 45A-2-3 will increase from .528 ac to .71 ac.

**Consistency with Land Use Regulations**

Chapter 155-18 of the Land Subdivision Regulations of the City Code provides for the adjustment of existing lot lines between two or more lots. This plan is consistent with those regulations.

**Staff Recommendation:**

The Planning Department recommends that the Board accept the application, open the public hearing, and vote to approve the lot line adjustment plan with the following conditions:

**Conditions to Be Met Prior to Signing of Plans:**

1. The applicant shall provide the Planning Department with a digital version of the final plat.
2. The applicant shall revise the plat to:
    a. Include the Licensed Land Surveyor and Certified Wetland Scientist signatures and stamps
    b. Include the Planning File # P18-18
3. Provide proof of compliance with requirements of prior subdivisions for these parcels.
4. Provide the Planning Department with drafts of deed language for Parcel A and Parcel B that that will be transferred from Parcel 45-2 to 45A-2-1 and 45A-2-3 respectively. The deeds shall include language that states there are wetlands on these parcels that are protected pursuant to Chapter 170-27.1

**Conditions to Be Met After Recording of the Plans:**

1. The applicant will record the deeds referenced in #4 above and provide the Planning Department with the Book and Page numbers of the recorded deeds.

# 12,22, and 32 Olive Meadow Lane

**Property Information**

| | |
|---|---|
| **Property ID** | A0045-002000 |
| **Location** | OLIVE MEADOW LN |
| **Owner** | STEAD NORA E TRUSTEE |

MAP FOR REFERENCE ONLY
NOT A LEGAL DOCUMENT

City of Dover, NH makes no claims and no warranties, expressed or implied, concerning the validity or accuracy of the GIS data presented on this map.

Parcels updated 03/29/2018
Properties updated 05/01/2018

**CIVILWORKS NEW ENGLAND**
181 WATSON ROAD
P.O. BOX 1166
DOVER, NH 03821-1166
PHONE: 603.749.0443 FAX: 603.749.7348

April 12, 2018

Re: Lot Line Adjustment Plan
Bean Family Trust

Subject: Lot Line Adjustment Plan
Bean Family Trust
12, 22, and 32 Olive Meadow Lane
Dover, NH
Our Reference No. 1717

Dear Mr. Bird:

On Behalf of our clients, Bean Family Trust, we are pleased to submit (5) full size sets, and (10) 11 x 17, of the attached Lot Line Adjustment Plan for Planning Board consideration:

We look forward to review by the Planning Board. If you have any questions that we might be able to answer, please do not hesitate to contact our office.

Sincerely,

**CIVILWORKS NEW ENGLAND**

Stephen J Haight, PE
SJH/pdd

# City of Dover, New Hampshire
# MINOR LOT LINE ADJUSTMENT APPLICATION

[Revision Date: May 18, 2017]

| *Office Use Only* | Project #: _____ | Date Received: _____ |
|---|---|---|
| | Amount Paid: _____ | Time Received: _____ |

**APPLICANT INFORMATION**

Name of Applicant: Bean Family Trust Telephone # (603) 512-4237

Address of Applicant: 12 Olive Meadow Lane, Dover, NH 03820

**FIRST PROPERTY OWNER AND PARCEL INFORMATION**

Name of 1st Property Owner (*if different from applicant*): SAME Telephone # (603) 512-4237

Address of 1st Property Owner: Same

Address of Property: Same

Assessor's Map # A Lot(s) # 45

Property Deed: Book 4475 Page: 144

Zoning District(s) R-40 Overlay District(s) Conservation & Wetlands Protection

Size of Existing Parcel (sq. ft.): See Page 2 Size of Proposed Parcel (sq. ft.): See Page 2

**SECOND PROPERTY OWNER AND PARCEL INFORMATION**

Name of 2nd Property Owner (*if different from applicant*): Daniel P. Irish Telephone # _____

Address of 2nd Property Owner: 22 Olive Meadow Lane, Dover, NH 03820

Address of Property: 22 Olive Meadow Lane, Dover, NH 03820

Assessor's Map # A Lot(s) # 45/A-2-1

Property Deed: Book 3998 Page: 974

Zoning District(s) R-40 Overlay District(s) _____

Size of Existing Parcel (sq. ft.): See Page 2 Size of Proposed Parcel (sq. ft.): See Page 2

***[Use additional application form if more than two lots are being adjusted]***

**SURVEYOR INFORMATION**

Name of Surveyor and Company (Licensed in N.H.) David Vincent, P.L.S. Civilworks

Address P.O. Box 1166, Dover, NH 03821 Telephone #: (603) 664-5786

Professional License #: 821 E-mail address: shaight@civilworksne.com

**SIGNATURES**

I/We hereby submit this application to the City of Dover Planning Board and attest that to the best of my knowledge all of the information on this application form and in the accompanying application materials and documentation is true and accurate. As applicant or as agent, I attest that I am duly authorized to act in this capacity.

Signature of First Property Owner: _____ Date: _____

Signature of Second Property Owner: _____ Date: _____

Signature of Applicant (*if different from owner*): _____ Date: _____

Signature of Agent: _____ Date: _____

**AUTHORIZATION TO ENTER SUBJECT PROPERTY**

I hereby authorize members of the Dover Planning Board, Planning Department and other pertinent City Departments and boards to enter my property for the purpose of evaluating this application, including performing inspections during the application phase, post-approval phase, construction phase and occupancy phase. It is understood that these individuals must use all reasonable care, courtesy, and diligence when on the property.

Signature of Property Owner: _____ Date: _____

| LOT # | EXISTING LOT SIZE | PROPOSED LOT SIZE |
|---|---|---|
| 45-2 | 117,546 sf | 105,810 SF |
| 45A-2-1 | 20,335 SF | 24,239 SF |
| 45A-2-3 | 22,999 SF | 30,827 SF |

Third Property Owner & Parcel Information

Name: Kristopher & Elizabeth Reischer

Address: 32 Olive Meadow Lane

Dover, NH 03820

Map A / Lot 45A-2-3

Deed Book 4018, Pg. 240

Zoning - R-40

See above for Lot Sizes

Signature of Third Property Owner _____

Professional License #: 821 E-mail address: shaight@civilworksne.com

**SIGNATURES**

I/We hereby submit this application to the City of Dover Planning Board and attest that to the best of my knowledge all of the information on this application form and in the accompanying application materials and documentation is true and accurate. As applicant or as agent, I attest that I am duly authorized to act in this capacity.

Signature of First Property Owner: _____ Date: 3/27/18

Signature of Second Property Owner: _____ Date: 2-20-2018

Signature of Applicant (*if different from owner*): _____ Date: _____

Signature of Agent: _____ Date: 3/26/18

**AUTHORIZATION TO ENTER SUBJECT PROPERTY**

I hereby authorize members of the Dover Planning Board, Planning Department and other pertinent City Departments and boards to enter my property for the purpose of evaluating this application, including performing inspections during the application phase, post-approval phase, construction phase and occupancy phase. It is understood that these individuals must use all reasonable care, courtesy, and diligence when on the property.

Signature of Property Owner: _____ Date: 3/27/18

| LOT # | EXISTING LOT SIZE | PROPOSED LOT SIZE |
|---|---|---|

Third Property Owner & Parcel Information

Name: Kristopher & Elizabeth Reischer

Address: 32 Olive Meadow Lane

Dover, NH 03820

Map A / Lot 45A-2-3

Deed Book 4018, Pg. 240

Zoning - R-40

See above for Lot Sizes

Signature of Third Property Owner _____ 2/18/2018

# *CITY OF DOVER MINOR LOT LINE ADJUSTMENT LIST OF ABUTTERS*

Pursuant to RSA 676:4, the State Law of New Hampshire, the City of Dover is required to notify the applicant, abutters (including holders of conservation easements), and any professional whose seal is on the plan, of the public hearing by certified mail, return receipt requested. Staff will provide the abutter information, while the applicant must provide accurate contact information for the owner, applicant and professional agents representing the project.

First **Owner:**

| TAX MAP | LOT # | PROPERTY OWNER | MAILING ADDRESS |
|---|---|---|---|
| A | 45-2 | Bean Family Trust | 12 Olive Meadow Lane, Dover, NH 03820 |

**Applicant (if different from owner):**

| APPLICANT NAME | APPLICANT COMPANY | MAILING ADDRESS |
|---|---|---|
| | | |

**Surveyor and/or Engineer/Professional Agent:**

| NAME | COMPANY | MAILING ADDRESS |
|---|---|---|
| David W. Vincent | Civilworks NE | PO Box 1622, Dover, NH 03821 |
| | | |
| | | |

**Conservation Easement Holder:**

| TAX MAP | LOT # | NAME OF EASEMENT HOLDER | MAILING ADDRESS |
|---|---|---|---|
| | | | |

S:\Department\Planning\Planning_Share\forms

Second Owner:

Tax Map A, Lot 45A-2-1,

Daniel P. Irish,

22 Olive Meadow Lane, Dover, NH 03820

Third Owner:

Tax Map A, Lot 45A-2-3,

Kristopher & Elizabeth Reischer,

32 Olive Meadow Lane, Dover, NH 03820

# PLANNING BOARD
# ESTIMATED FEE SCHEDULE

This is only provided to give you an estimate of the application fees. *After you submit an application, staff will invoice you a total.* All fees must be paid two weeks before the Planning Board meeting. **If the Fee has not been paid, the item will not be placed upon the agenda.**

**A. TOTAL FEE** paid by cash or check made payable to "City of Dover"

1. Application fee for the following:
   - SUBDIVISION $150.00 x # _____ new lots created = $ _____
   - LOT LINE ADJUSTMENT $200.00 (if more than two lots involved, add $100.00 per lot) = $ 300.00
   - SITE REVIEW - RESIDENTIAL $100.00 x # ____ per dwelling unit = $ _____
   - SITE REVIEW – NON-RESIDENTIAL (not to exceed $10,000)
     New construction $.15 sq. ft. x # _____ sq. ft. = $ _____
     Additions (new floor space) $.10 per sq. ft. x # _____sq. ft. = $ _____
   - IMPERVIOUS PAVED AREA (for new development) OR IMPERVIOUS PARKING LOT ADDITIONS (not to exceed $10,000) $.07 sq. ft. x # _____ = $ _____
   - MOTEL/HOTEL $35.00 x # ___ per lodging unit = $ _____
   - CHANGE OF USE (not to exceed $5,000)
     Existing floor space $.10 per sq. ft. x # ____ sq. ft. = $ _____
   - CONDITIONAL USE PERMIT $150.00 x # _____ per application = $ _____
   - GRAVEL PIT/ EXCAVATIONS - Application fee $50.00 & Permit fee $75.00 = $ _____
   - EXTENSIONS OF/AMENDMENTS TO/WAIVERS FOR AN APPROVED PLAN ($150.00 minimum) $50.00 x # ____ per hour of review $ _____
   - REQUEST FOR REZONING $150.00 = $ _____
   - DRIVEWAY WAIVER – $100.00 application fee =
     Letter of rejection from Engineering Department, diagram & letter from owner $ _____

**B. Abutter Notification/Mailing Labels -** this office will create and print the abutter list and provide labels in triplicate for each abutter. The applicant/owner will need to provide to this office the engineer, architect, land surveyor or soil scientist whose professional seal appears on the plan with names and addresses for notices. You will be notified with the amount due, once this has been completed.

1. Applicant & Owner, engineer, architect, land surveyor or soil scientist
   Certified letters fee # _____ of x $8.00 =
2. Certified letters fee: # of abutters _____ X $8.00 = $ _____
3. First Class Mail fee (for individual owner of units within a condominium or other collective form of ownership): # of abutters _____ X $1.00 = $ _____
4. Creating/Printing Abutter Labels in triplicate per sheet _____ x $10.00 = $ _____

**C. Foster's newspaper public notice fee** **$ 80.00**

**D. Digital Version of the Plan** in PDF/A format or Archive Fee $1.00 x # 1 per sheet of plan set = $ _____

*(Revised May 15, 2017)*

**TOTAL FEE $** 380.00

# City of Dover, New Hampshire
# LOT LINE ADJUSTMENT SUBMISSION CHECKLIST

[Revision Date: May 15, 2017]

This review checklist is intended to assist the applicant in the planning process of preparing a Subdivision application for Planning Board action. The size of the project will determine the types of information required for review, therefore, a **pre-application conference** with the Planning Department to determine the list of items that must be completed is strongly encouraged.

**Fifteen (15), folded, copies of the plan set and materials will be due 3 weeks prior to the Planning Board meeting. Fees will be invoiced and are due 2 weeks prior to Planning Board.**

*The applicant is cautioned that this checklist is only a guide and is not intended to be a complete list of all subdivision requirements. Please refer to the Subdivision Regulations for full details.*

APPLICANT: Bean Family Trust File Number: _____

PROPERTY LOCATION: 12 Olive Meadow Lane Tax Map: A Lot: 45

| | Explain How Provided | Reviewed |
|---|---|---|
| 1. **Completed and signed Application form** | | |
| 2. **Electronic copy of the surveyed plat layout** | | |
| 3. **Electronic copy of supplementary materials and application** | | |
| 4. **List of all professional agents to be notified for Planning Board** | | |
| 5. **Fifteen copies of LLA plan w/scale of not less than 1"=50' or 1"=100' for larger adjustments. Plans shall contain the following items as appropriate:** | | |
| Location map at appropriate scale | | |
| Planning File # | | |
| Date, north arrow and scale | | |
| Names of all abutting property owners | | |
| Name and address of owners | | |
| Signature & stamp of NH licensed land surveyor | | |
| Zoning District boundaries, including any special or overlay districts | | |
| Location of Conservation District areas | | |
| Location, names and widths of existing and streets, including pavement widths, grades, curbs and crosswalks | | |
| Location and widths of existing & proposed easements & right of ways | | |
| Existing and proposed property lines with dimensions and bearings tied into Dover's Geographic Information System coordinate system | | |
| Existing and proposed lot areas in square feet | | |
| Existing and proposed buildings and structure locations | | |
| Minimum building setbacks or build to lines on all lots | | |
| Map and lot numbers for existing and proposed lots as assigned by Tax Assessor | | |
| Location, material and size of existing and proposed permanent monuments | | |
| All applicable Dover Common Subdivision notes | | |

REVIEWED BY: _____ DATE_____

**P18-18** **12,22, &32 Olive Meadow Lane**

| Property ID | Location | Owner 1 | Owner 2 | Owner Address 1 | City | State | Zip |
|---|---|---|---|---|---|---|---|
| A0045-000000 | 12 OLIVE MEADOW LN | BEAN JEFFREY W | | 12 OLIVE MEADOW LN | DOVER | NH | 03820 |
| A0045-001000 | OLIVE MEADOW LN | INDIAN RIDGE AT DOVER LLC | | 42J DOVER POINT RD | DOVER | NH | 03820 |
| A0045-A00002 | 36 OLIVE MEADOW LN | TEMPLE ISRAEL OF DOVER INC | | PO BOX 254 | DOVER | NH | 03821-0254 |
| A0045-A00009 | 11 FOXTAIL RIDGE RD | FENNIMAN WILLIAM W JR | FENNIMAN DONNA M | 11 FOXTAIL RIDGE | DOVER | NH | 03820 |
| A0045-A00010 | 9 FOXTAIL RIDGE RD | MITCHELL EDITH H | | 9 FOXTAIL RIDGE RD | DOVER | NH | 03820 |
| A0045-A00011 | 7 FOXTAIL RIDGE RD | MOURGENOS GREGORY S & | MOURGENOS NOEL A | 7 FOXTAIL RIDGE RD | DOVER | NH | 03820 |
| A0045-A00012 | 5 FOXTAIL RIDGE RD | MURPHY ROBERT J | MURPHY MARILYN A | 5 FOXTAIL RIDGE RD | DOVER | NH | 03820-5911 |
| A0047-009000 | 8 REYNERS BROOK DR | KEELER SANDRA J | KEELER DAVID A | 8 REYNERS BROOK | DOVER | NH | 03820 |
| A0047-011000 | 10 REYNERS BROOK DR | CALCULATOR STEPHEN | CALCULATOR JEAN | 10 REYNERS BROOK | DOVER | NH | 03820 |
| A0047-013000 | 12 REYNERS BROOK DR | GIANNECHINI ANTONIO L | GIANNECHINI ELIZABETH S | 12 REYNERS BROOK | DOVER | NH | 03820 |
| A0047-015000 | 14 REYNERS BROOK DR | TURNER CHRISTOPHER & JUDITH TRUSTEES | TURNER CHRISTOPHER AND JUDITH REV TRUST | 14 REYNERS BROOK DRIVE | DOVER | NH | 03820 |
| A045A-002002 | 28 OLIVE MEADOW LN | D ABROSCA DAVID L & | D ABROSCA CARIN J | 28 OLIVE MEADOW LN | DOVER | NH | 03820 |
| A045A-002004 | 25 OLIVE MEADOW LN | CHILDRESS ANDREW J & | CHILDRESS GREGORY H AND ANN C | 25 OLIVE MEADOW LN | DOVER | NH | 03820 |
| A045A-002005 | 21 OLIVE MEADOW LN | NAQSHBANDI SYED MUDASSAR & | AFZAL ASRA | 21 OLIVE MEADOW LN | DOVER | NH | 03820 |
| A045A-002006 | 15 OLIVE MEADOW LN | SINGH RAGHBIR SINGH & | KAUR PARMINDER | 15 OLIVE MEADOW LN | DOVER | NH | 03820-4718 |
| A045A-002007 | 11 OLIVE MEADOW LN | GORMAN DANIEL A & | GORMAN MARY C | 11 OLIVE MEADOW LN | DOVER | NH | 03820-4718 |
| A045A-002008 | 5 OLIVE MEADOW LN | CINTAVEY ALBERT T & KATHLEEN JANE TRUSTE | A AND K CINTAVEY FAMILY REVOCABLE TRUST | 5 OLIVE MEADOW LN | DOVER | NH | 03820 |
| A045A-002009 | 3 OLIVE MEADOW LN | THOMPSEN DAVID P & | THOMPSEN LINDA M | 3 OLIVE MEADOW LN | DOVER | NH | 03820 |
| | | BEAN FAMILY TRUST | | 12 OLIVE MEADOW LANE | DOVER | NH | 03820 |
| | | CIVILWORKS NE | DAVID W. VINCENT | P.O. BOX 1622 | DOVER | NH | 03820 |
| | | DANIEL P. IRISH | | 22 OLIVE MEADOW LANE | DOVER | NH | 03820 |
| | | KRISTOPHER & ELIZABETH REISCHER | | 32 OLIVE MEADOW LANE | DOVER | NH | 03820 |

LOCATION PLAN
NOT TO SCALE

## Curve Table:

| CURVE | RADIUS | ARC LENGTH | DELTA ANGLE |
|---|---|---|---|
| C1 | 385.00' | 189.69' | 28°13'50" |
| C2 | 145.00' | 33.53' | 13°14'57" |
| C3 | 65.00' | 161.74' | 142°34'12" |
| C4 | 315.00' | 152.63' | 27°45'39" |

## Length Table:

| LINE | BEARING | DISTANCE |
|---|---|---|
| L1 | N11°36'08"E | 92.16' |
| L2 | S18°14'59"E | 77.93' |
| L3 | N76°34'46"W | 29.99' |
| L4 | N16°48'57"W | 42.82' |
| L5 | N17°31'50"W | 63.27' |
| L6 | S41°42'42"E | 50.00' |
| L7 | S48°17'18"W | 97.00' |
| L8 | N41°42'42"W | 20.00' |
| L9 | S11°36'08"W | 83.79' |
| L10 | S41°31'40"E | 25.00' |
| L11 | S47°12'56"E | 50.23' |
| L12 | N48°17'18"E | 9.65' |

## Lot Area Calculations:

| LOT NO. | EXISTING GROSS AREA | PROPOSED GROSS AREA | EXCLUDED AREA | NET AREA |
|---|---|---|---|---|
| 45–2 | 117,546 S.F. | 105,810 S.F. | 18,300± S.F. | 89,140± S.F. |
| 45A–2–1 | 20,335 S.F. | 24,239 S.F. | 420± S.F | 23,820± S.F. |
| 45A–2–3 | 22,999 S.F. | 30,827 S.F. | 2,450± S.F | 28,370± S.F. |

*Excluded Areas:

– Conservation District (Slopes >20%)

– Wetland Protection Areas

## Legend:

| | |
|---|---|
| C1 | See Curve Table |
| N/F | Now or Formerly |
| OHP | Overhead Utilities |
| SCRD | Strafford County Registry of Deeds |
| ● | Iron Rod Found |
| ■ | Granite Bound Found |
| ◉ | Drill Hole Found |
| ◎ | Iron Rod to be Set |
| | Utility Pole |
| | Stone Wall |
| | Lot Line to be Relocated |
| | Limit of Jurisdictional Wetlands |
| | Building Setback |
| | 50' Wetland Buffer |

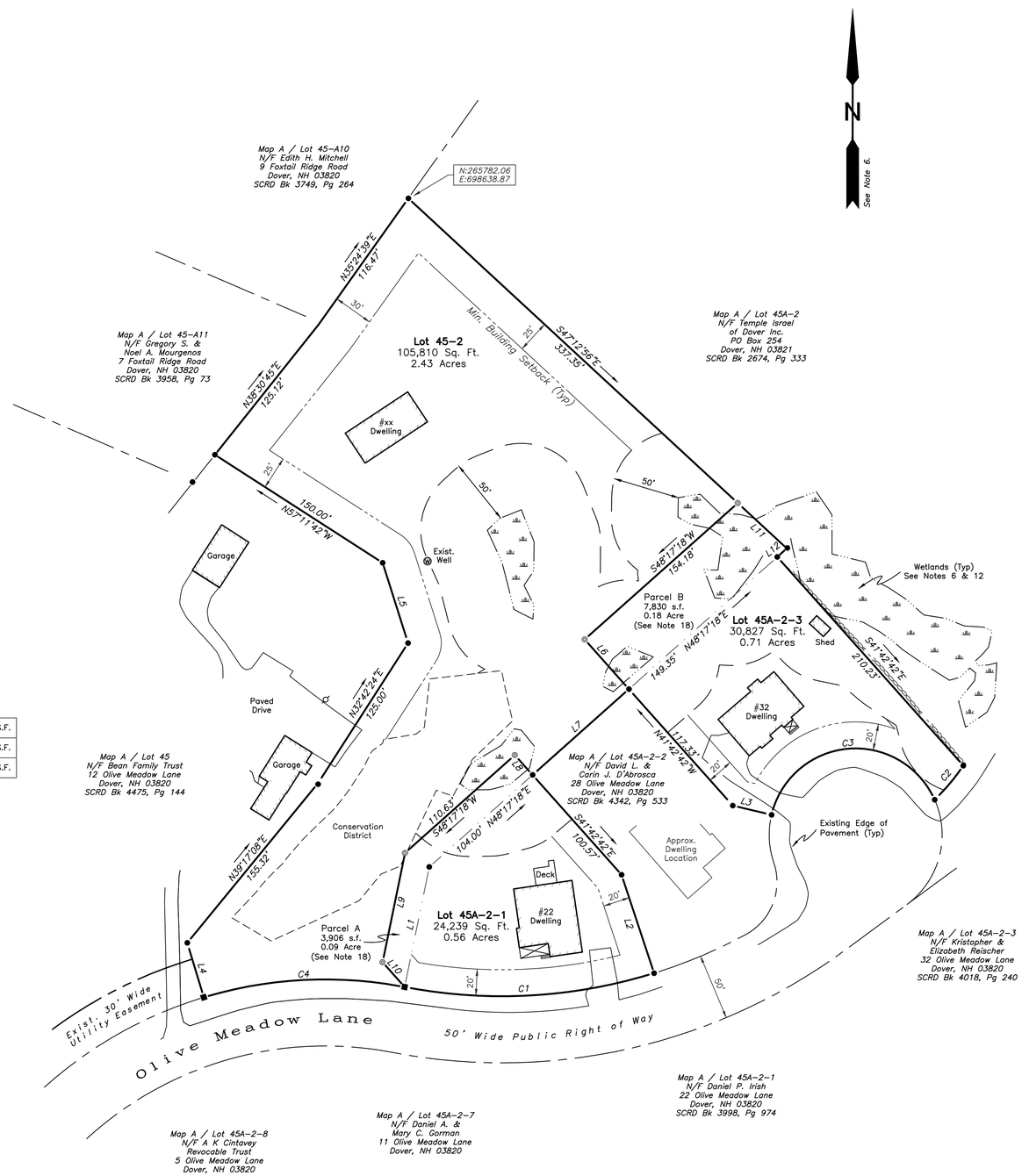


## Notes:

1. The intent of this plan is to relocate the common lot line between the subject properties.

2. Owners of Record are: Bean Family Trust
12 Olive Meadow Lane
Dover, NH 03820

_____
Authorized Signature

Daniel P. Irish
22 Olive Meadow Lane
Dover, NH 03820

_____
Authorized Signature

Daniel & Elizabeth M. Reischer
32 Olive Meadow Lane
Dover, NH 03820

_____
Authorized Signature

3. The parcels are shown as Lot No. 4–2, 45A–2–1 & 45A–2–3 on Map A of the City of Dover Tax Assessor's Maps.

4. The subject parcels contains the following;
Lot 45–2 – 2.70 acres or 117,546 sq. ft. area of land.
Lot 45A–2–1 – 0.67 acres or 20,335 sq. ft. area of land.
Lot 45a–2–3 – 0.528 acres or 22,999 sq. ft. area of land.

5. Title reference for the project parcels are the Strafford County Registry of Deeds, Book No. 4475, Page No. 144 (Lot 45–2), Book No. 3998, Page No. 974 (Lot 45A–2–1) and Book No. 4018, Page No. 240 (Lot 45A–2–3),

6. Reference Plan: (a) "Open Space Subdivision Plan Olive Meadow, Dover, NH," dated December 2, 2010, revised 2–07–2011, prepared by Tritech Engineering Corp., SCRD Plan No. 102–16 & 017, (b) "Boundary Line Adjustment Plan and Amended Subdivision Plan Changing Places, LLC and Jeffrey & Anne Bean, Dover, NH," dated July 11, 2011, revised 8–8–2011, prepared by Tritech Engineering Corp., SCRD Plan No. 102–80 and (c) "Subdivision Plan Bean Family Trust, Dover, NH," dated 6–30–2017, revised 8–28–2017, prepared by Civilworks New England, SCRD Plan No. 114–70.

7. Lot 45–2 is the beneficiary of a 30' wide utility easement across Map A Lot 45–1 as described in SCRD Bk 4356, Pg. 733. Lots 45A–2–1 & 45A–2–3 are subject to a utility easement as described in SCRD Bk 2994, Pg. 744, a conservation easement as described in SCRD Bk 3940, Pg. 348, protective covenants as described in SCRD Bk 3940, Pg. 354 and homeowner's association as described in SCRD Bk 3940, Pg. 360,

8. Zoning dimensional and density requirements are as follows:

| | Lots 45A–2–1 & 45A–2–3 |
|---|---|
| a. Zoning districts R–40 | |
| b. Minimum lot size is 40,000 sq. ft. | 20,000 sq. ft. |
| c. Minimum lot frontage is 150 ft. | 40 ft. |
| d. Minimum yard setbacks: | |
| Front 40 ft. | 20 ft. |
| Side 25 ft. | 20ft. |
| Rear 30 ft. | 20 ft. |
| Abut–a–street 40 ft. | |
| e. Maximum lot coverage 10% | |
| f. Maximum building height 35 ft. | |

Outbuildings/Accessory Use
Minimum yard setbacks:
Front 40 ft.
Side 10 ft.
Rear 10 ft.
Abut–a–street 40 ft.

This property falls within the following zoning overlay districts: Conservation & Wetlands Protection. A 50' natural buffer shall be maintained from wetland protection areas.

9. No variances by the Dover Zoning Board were required for this lot line adjustment.

10. Property line information has been obtained from a survey performed by Civilworks New England between May 31, 2017 and June 19, 2017 and updated on November 1, 2017, with an error of closure not greater than 1 in 10,000.

11. Subject parcels are not located within a Federally designated flood hazard area as depicted on FEMA Community panel number 33017C0310E, Effective Date: September 30, 2015.

12. Wetlands were delineated by Michael Mariano, of Highland Soil Services, Certified Wetlands Scientist, Certification Number 183, in accordance with Chapter 170–27.1 of the Zoning Ordinance, as depicted on the plan references in Note 6.

13. Topography depicted is based on the plan references in Note 6.

14. Basis of bearing is based on the plan references in Note 6.

15. Parcels are currently served by underground utilities.

16. Parcels are currently served by municipal water and municipal sewer.

17. The existing use for each lot is single family.

18. Parcel A is to be conveyed from Lot 45 to Lot 45A–2–1 and Parcel B is to be conveyed from Lot 45 to Lot 45A–2–3 and are not to be considered a separate lots.

19. The licensed land surveyor of this plan does not warranty nor guarantee the location of utilities shown or not shown on this plan. Pursuant to New Hampshire Statute RSA 374, Sections 47–56, the owner/contractor, prior to the commencement of any construction, shall verify the location of all utilities and contact "DigSafe" at 1–800–344–7233 or dial 811.

Paul J. Connolly, NH Licensed Land Surveyor #683 Date

GRAPHIC SCALE: 1"=50'
50 0 25 50 100 200

For Registry of Deeds Purposes

DOVER PLANNING DEPARTMENT FILE:

CIVILWORKS NEW ENGLAND
CIVIL ENGINEERING
181 Watson Road, P.O. Box 1166
Dover, New Hampshire 03820
(603) 749-0443

| NO. | REVISION | APP'D | DATE |
|---|---|---|---|
| | | | |

DATE: 4–12–2018
SCALE: 1"=50'
DRAWN BY: DWV
DESIGN BY: PJC
APPROVED BY: PJC
PROJECT NO: 1717
FILE:

# LOT LINE ADJUSTMENT PLAN

12, 22 & 32 OLIVE MEADOW LANE
DOVER, NH
COUNTY OF STRAFFORD

LOT LINE ADJUSTMENT PLAN
PREPARED FOR BEAN FAMILY TRUST,
DANIEL P. IRISH and KRISTOPHER
& ELIZABETH M. REISCHER
TAX MAP A
LOTS 45–2, 45A–2–1 & 45A–2–3

C–1

ONLY SHEET C–1 IS TO BE RECORDED

CITY OF DOVER

# PLANNING BOARD - STAFF MEMO FILE #P18-07

Application Type: Major Subdivision with Transfer of Development Rights
Applicant(s): TDAK & Company LLC
Owner(s): TDAK & Company LLC
Location: 99 Sixth Street (Tax Map 35, Lot 57)
Meeting Date: May 8, 2018

**INTENT:** To construct a 20-ft. wide private access way to existing two-family dwelling and construct four single-family dwellings in a subdivision (condominium lots).

**LOTS/UNITS PROPOSED:** 4 single family houses and one existing duplex

**AGENDA ITEM #:** 4-E

**FILE:** P18-19

**APPLICANT/OWNER:** TDAK & Company LLC

**LOCATION:** 99 Sixth Street (Assessor's Map 35, Lot 57)

**ACREAGE:** 2.07 acres

**ZONING DISTRICT:** Medium Density Residential District (R-12)

**EXISTING LAND USE:** Duplex

**PROPOSED LAND USE:** 4 single family houses and one existing duplex

**SURROUNDING LAND USE:** Residential – single family, two family and multi-family

**ZBA ACTION:** Variance - duplex (H79-32)

**ATTACHMENTS:** Subdivision Plan

**APPLICATION IS COMPLETE:** Yes

**NOTICES SENT:** Abutter notices were sent by certified mail to all abutters for this meeting

**PERMITS REQUIRED:**
-Conditional Use Permit for Conservation District

**WAIVERS REQUESTED:**
**155-33.G**: for a 10% roadway grade exceeding the 8% grade maximum, and for grade exceeding 3% within 75' of intersection
**155-33.C**: no sidewalks or curbs are proposed
**155-33.A**: for a 30' rather than 50' street right-of-way

**Summary of Request and Background**
The applicant has submitted a plan to create a condominium subdivision including a duplex, four detached single-family dwellings, and common area. The lots will be serviced by public water and sewer and accessed via a private road.

The applicant intends to purchase development rights for an additional two dwelling units, and limit all four new dwelling units to no more than 1,400 square feet, per posted amendments to Section 170-27.2 of the Zoning Ordinance.

The Conservation Commission has not yet reviewed this proposal, but it is expected to be on their May 14th agenda. If the Planning Board decides to conduct a site visit, the Conservation Commission would be invited to attend.

**Waiver Requests**
The applicant requests three waivers relative to the private road: a reduced right-of-way width, grades exceeding the maximum overall and within 75' of Sixth Street, and no provision of curbs or sidewalks. The applicant has agreed to contribute funds to the nearby Community Trail if granted a waiver from providing curbs and sidewalks.

**Consistency with Land Use Regulations**
Chapter 155-15 of the Land Subdivision Regulations of the City Code provides for subdivisions of existing lots. Section 155-51 allows the Board to grant waivers.

**STAFF RECOMMENDATION: Waiver Request**
The Planning Department recommends that the Planning Board accept the application for review, open the public hearing, table the public hearing, continue the item to the regular meeting on May 22nd and schedule a site walk.

**STAFF RECOMMENDATION: Subdivision**
The Planning Department recommends that the Planning Board accept the application for review, open the public hearing, table the public hearing, continue the item to the regular meeting on May 22nd and schedule a site walk.

# 99 Sixth Street

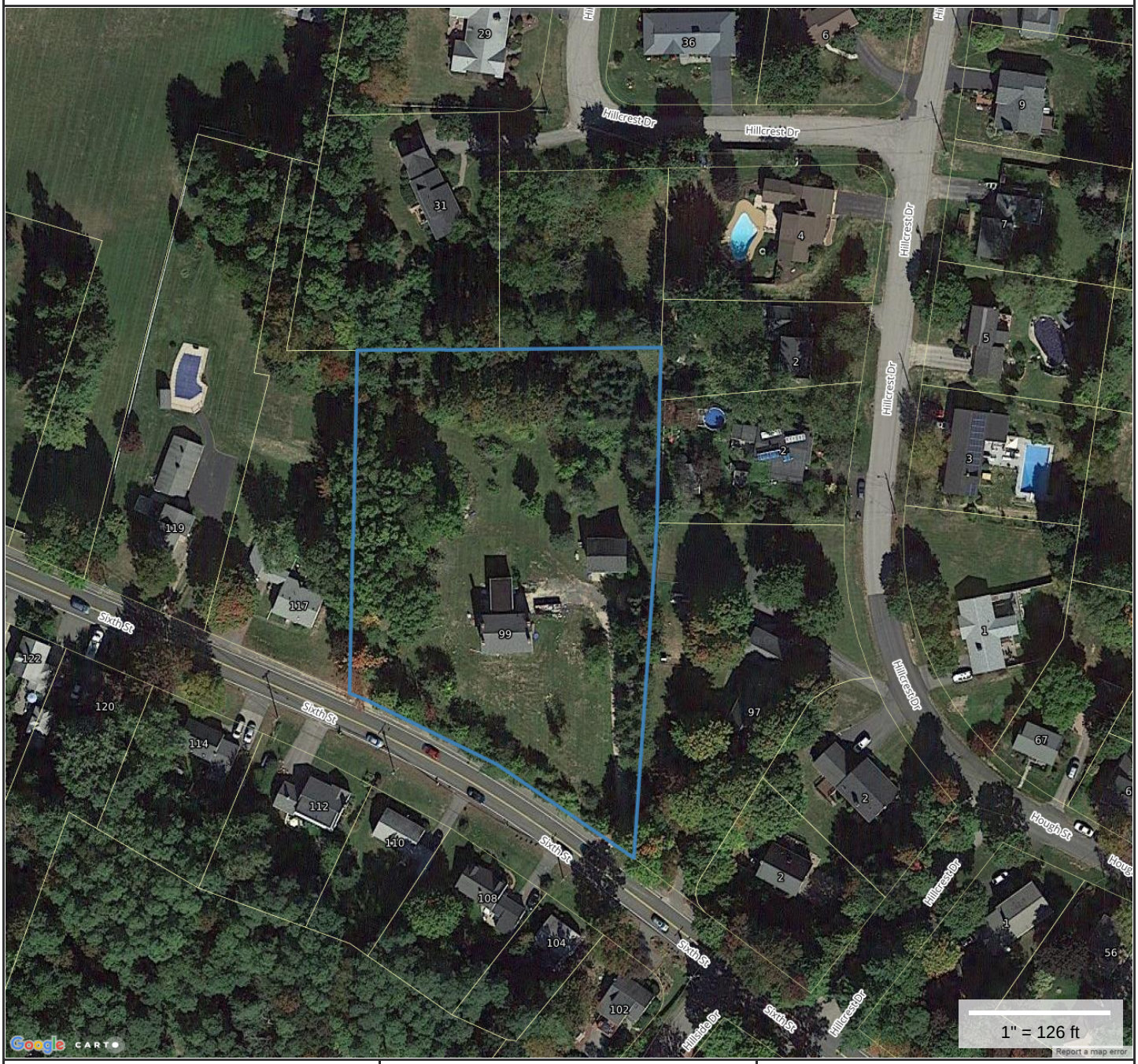


**Property Information**

| | |
|---|---|
| **Property ID** | 35057-000000 |
| **Location** | 99 SIXTH ST |
| **Owner** | TDAK & COMPANY LLC |

MAP FOR REFERENCE ONLY
NOT A LEGAL DOCUMENT

City of Dover, NH makes no claims and no warranties, expressed or implied, concerning the validity or accuracy of the GIS data presented on this map.

Parcels updated 03/29/2018
Properties updated 05/01/2018

# City of Dover, New Hampshire
# SUBDIVISION APPLICATION

[Revision Date: August 02, 2017]

| *Office Use Only* | Project #: _____ | Date Received: _____ |
|---|---|---|
| | Amount Paid: _____ | Time Received: _____ |

## APPLICANT AND OWNER INFORMATION

Name of Applicant: TDAK & Company LLC Telephone #603-235-8469

Address of Applicant: 9 Kelsey Drive, Greenland, NH 03840

Name of Property Owner (*if different from applicant*): _____ Telephone #_____

Address of Property Owner: 9 Kelsey Drive, Greenland, NH 03840

E-Mail Address: TDAK3.0@GMAIL.COM

## PROPERTY INFORMATION

Address of Property: 99 Sixth Street

Assessor's Map # 35 Lot(s) # 57

Zoning District(s) R-12 Overlay District(s) _____

Size of Parcel: 90,322 Sq. Ft. (2.07 Ac.) Property Deed: Book 4337 Page: 557

Existing Use of Property: Residence / 2 Unit

## SUBDIVISION INFORMATION

Subdivision Type: Major (4 + net new lots): X Open Space: TDR

Existing Number of Lots: 2 Units Proposed Number of Lots: 4 Units (Toal 6 Units)

City Water? X Yes ___ No How far is city water from the property? Approx. 30 Feet

City Sewer? X Yes ___ No How far is city sewer from the property? Approx. 45 Feet

Highway Access (check where applicable): X City Street ____ State Highway

Estimated Length of Proposed Roads: 345 feet Public or Private Road? Private

## WAIVER REQUESTS

Subdivision Regulations section(s) to be waived: _____

Justification for waiver request(s) (*attach additional sheets as needed*): _____

**SURVEYOR INFORMATION**

Name of Surveyor and Company (Licensed in N.H.) Kenneth A. Berry, PE, LLS Berry Surveying & Engineering

Address 335 Second Crown Point Rd, Barrington, NH 03825 Telephone #: 603-332-2863

Professional License #: 14243 E-mail address: K.Berry@BerrySurveying.com

**ENGINEER INFORMATION**

Name of Engineer and Company (Licensed in N.H.) Kenneth A. Berry, PE, LLS Berry Surveying & Engineering

Address 335 Second Crown Point Rd, Barrington, NH 03825 Telephone #: 603-332-2863

Professional License #: 14243 E-mail address: K.Berry@BerrySurveying.com

**SIGNATURES**

I/We hereby submit this application to the City of Dover Planning Board and attest that to the best of my knowledge all of the information on this application form and in the accompanying application materials and documentation is true and accurate. Furthermore, I/We submit that the existing conditions sheet of the plan represents the lot in question, and that no alteration of the site shall take place during Planning Board review up to and including the pre-construction meeting. As applicant or as agent, I attest that I am duly authorized to act in this capacity.

Signature of Property Owner: _____ Date: 3-28-18

Signature of Applicant (*if different from owner*): _____ Date: _____

Signature of Agent: _____ Date: 3-28-18

**AUTHORIZATION TO ENTER SUBJECT PROPERTY**

I, and my successors, hereby authorize members of the Dover Planning Board, Planning Department and other pertinent City Departments and boards to enter my property for the purpose of evaluating this application, including performing inspections during the application phase, post-approval phase, construction phase and occupancy phase. It is understood that these individuals must use all reasonable care, courtesy, and diligence when on the property.

Signature of Property Owner: _____ Date: 3-28-18

**AUTHORIZATION TO COMPLETE THE PROJECT ON SUBJECT PROPERTY**

I, and my successors, hereby authorize the City of Dover and its assigns to enter my property for the purpose of completing the site work as required by the approved plan should the letter or credit or other surety be called. It is understood that these individuals must use all reasonable care, courtesy, and diligence when on the property.

Signature of Property Owner: _____ Date: 3-28-18

Signature of Applicant (*if different from owner*): _____ Date: _____

**CERTIFICATION OF FEES**

I, and my successors, hereby certify that I understand that the City of Dover collects impact fees, utility investment fees and inspection fees for projects developed in Dover. Said fees must be paid before a Certificate of Occupancy can be obtained for a structure, unless a different payment schedule is agreed to by the applicant and the City prior to approvals being issued by the Dover Planning Board. Additionally, should the property be in "Current Use" it will be subject to the Land Use Change Tax.

Signature of Property Owner: _____ Date: 3-28-18

Signature of Applicant (*if different from owner*): _____ Date: _____

**CERTIFICATION OF PUBLIC ROADWAY ACCEPTANCE**

I, and my successors, hereby certify that I understand that the acceptance of a roadway as a public road is an action of the City Council in its sole and complete discretion. In order for the City Council to consider accepting a road as public, it must be free of encumbrances. No roadway with private utility easements shall be accepted as a public road by the City unless the easements are expunged prior to the transfer of land to the City. License agreements for any and all private utilities within the right of way may be granted by the City upon acceptance of the unencumbered roadway consistent with applicable state law.

Signature of Property Owner: _____ Date: 3-28-18

Signature of Applicant (*if different from owner*): _____ Date: _____

## *CITY OF DOVER SUBDIVISION*
## *LIST OF ABUTTERS*

Pursuant to RSA 676:4, the State Law of New Hampshire, the City of Dover is required to notify the applicant, abutters (including holders of conservation easements), and any professional whose seal is on the plan, of the public hearing by certified mail, return receipt requested. Staff will provide the abutter information, while the applicant must provide accurate contact information for the owner, applicant and professional agents representing the project.

**Owner:**

| TAX MAP | LOT # | PROPERTY OWNER | MAILING ADDRESS |
|---|---|---|---|
| | | | |

**Applicant (if different from owner):**

| APPLICANT NAME | APPLICANT COMPANY | MAILING ADDRESS |
|---|---|---|
| | | |

**Surveyor and/or Engineer/Professional Agent:**

| NAME | COMPANY | MAILING ADDRESS |
|---|---|---|
| | | |
| | | |
| | | |

**Conservation Easement Holder:**

| TAX MAP | LOT # | NAME OF EASEMENT HOLDER | MAILING ADDRESS |
|---|---|---|---|
| | | | |

# City of Dover, New Hampshire
# SUBDIVISION SUBMISSION CHECKLIST

[Revision Date: December 15, 2017]

This review checklist is intended to assist the applicant in the planning process of preparing a Subdivision application for Planning Board action. The size of the project will determine the types of information required for review, therefore, a **pre-application conference** with the Planning Department to determine the list of items that must be completed is strongly encouraged.

**Fees will be invoiced and are due along with fifteen (15), folded, copies of the plan set and materials, including response to TRC comments, will be due 3 weeks prior to the Planning Board meeting.**

*The applicant is cautioned that this checklist is only a guide and is not intended to be a complete list of all subdivision requirements. Please refer to the Subdivision Regulations for full details.*

APPLICANT: TDAK File Number: _____

PROJECT TITLE: CARMELO DRIVE

PROPERTY LOCATION: 99 SIXTH STREET Tax Map: 35 Lot: 57

| | Explain How Provided | Reviewed |
|---|---|---|
| **1. Completed and signed Application form** | | |
| **2. Electronic copy of the surveyed plat layout** | CD | |
| **3. Electronic copy of supplementary materials and application** | CD | |
| **4. Traffic Impact Assessment and Analysis (Standard or Advanced)** | CD Standard | |
| **5. Fiscal Impact Analysis (For more than 10 units)** | N/A | |
| **6. Waiver requests to the Subdivision Regulations, with written justification** | N/A | |
| **7. Conditional Use Permit applications** | CUP Needed | |
| **8. Narrative describing yield plan and cost analysis** | CD | |
| **9. List of all professional agents to be notified for Planning Board** | BS+E & SRE | |
| **10. Letter to Serve from Public and Private Utilities** | X | |
| **11. Eight folded copies of subdivision plan w/scale of not less than 1"=50' or 1"=100' for larger subdivisions, for TRC. Plans shall contain the following items as appropriate:** | X | |
| Location map at appropriate scale | X | |
| Proposed subdivision name and title and Planning File # | X | |
| Date, north arrow and scale | X | |
| Names of all abutting property owners | X | |
| Name and address of owners and/or applicants | X | |
| Signature & stamp of NH licensed land surveyor and/or engineer | X | |
| Zoning District boundaries, including any special or overlay districts | X | |
| Location of Conservation District areas | X | |
| Location, names and widths of existing and proposed streets, including pavement widths, grades, curbs and crosswalks | X | |
| Location and widths of existing & proposed easements & right of ways | X | |
| Location and widths of existing and proposed sidewalks | X | |
| Existing and proposed property lines with dimensions and bearings tied into Dover's Geographic Information System coordinate system | X | |
| Existing and proposed lot areas in square feet | X | |
| Existing and proposed topographic information at two foot intervals | X | |

| | Explain How Provided | Reviewed |
|---|---|---|
| Existing and proposed buildings and structure locations | X | |
| Minimum building setbacks or build to lines on all lots | X | |
| Location and size of existing and proposed electric, telephone, gas cable and other underground utilities | X | |
| Existing and proposed water lines and fire hydrants, including materials and capacity needed | X | |
| Location and materials of sanitary sewage facilities within project site and projected additional peak hour sewer load | X | |
| Existing and proposed septic system, including test pit locations and results and NHDES subdivision permit number | N/A | |
| Existing and proposed stormwater lines and facilities | X | |
| Existing and proposed streetlights | X | |
| Location of Flood Hazard Zone | X | |
| Location of all bodies of water and watercourses | N/A | |
| Location of wetlands and buffers | N/A | |
| Neighborhood plan with aerial underlay showing how project relates to abutting uses | X | |
| Existing natural features and/or significant vegetation on property | X | |
| Depict existing contours up to 100 ft. beyond project limits | X | |
| Soil types | X | |
| Map and lot numbers for existing and proposed lots as assigned by Tax Assessor | X | |
| Location of all land offered for dedication for public use or land to be held in common by property owners of the subdivision | X | |
| Location, material and size of existing and proposed permanent monuments | X | |
| Existing railroad lines | N/A | |
| Note regarding solid waste disposal | X | |
| All applicable Dover Common Subdivision notes | X | |
| **12. Construction Detail Sheets shall contain the following information:** | | |
| Profiles showing existing & proposed elevations along the center lines of proposed streets & within 100' of intersections with existing streets | X | |
| Profiles showing the locations & a typical cross-section detail of streets | X | |
| Location of street trees, street lighting poles and street signs | X | |
| Location, size and invert elevations of existing and proposed sanitary sewers, stormwater drains and fire hydrants | X | |
| Location and size of all water, gas and other underground utilities | X | |
| **13. Additional Information if appropriate** | | |
| Stormwater Management Plan depicting the existing and proposed storm drainage system and engineered drainage analysis | X | |
| Stormwater Management System Operation and Maintenance Plan | X | |
| Erosion and Sedimentation Control Plan | X | |
| Perimeter Landscaping Plan | X | |
| Proposed restrictive covenants or homeowners association documents | X | |
| Dates and permit numbers of all required state and federal permits | X | |
| If wetland buffer, indicate placards locations, as applicable | X | |
| Hydrogeologic study if located in Groundwater Protection Zone | N/A | |
| Provide additional exhibits/technical data determined appropriate by the Planning Board or its staff as required | N/A | |

REVIEWED BY: _____ DATE_____ TRC DATE_____

**P18-07** **99 Sixth Street**

| Property ID | Location | Owner 1 | Owner 2 | Owner Address 1 | City | State | Zip |
|---|---|---|---|---|---|---|---|
| 34010-000000 | 102 SIXTH ST | MCHENRY DARLENE | | 102 SIXTH ST | DOVER | NH | 03820 |
| 34012-000000 | 104 SIXTH ST | THOMPSON SETH G & | THOMPSON GLENN | 104 SIXTH ST | DOVER | NH | 03820-2624 |
| 34012-A00000 | 108 SIXTH ST | GINN KATHERINE K | | 644 STATE ST APT 4 | PORTSMOUTH | NH | 03801 |
| 34013-000000 | 1 6 HILLSIDE DR | PAT PAR INC | | 385 SIXTH ST | DOVER | NH | 03820-5935 |
| 34013-A00000 | 110 SIXTH ST | RUEL PAUL LIFE ESTATE & | MARCOTTE RHONDA AND LOPES TAMARA 50% EA | 110 SIXTH ST | DOVER | NH | 03820 |
| 34013-B00000 | 112 SIXTH ST | MORRISSEY-SMITH KIMBERLEE J | | 112 SIXTH ST | DOVER | NH | 03820 |
| 34013-C00000 | 114 SIXTH ST | LUNT TERESA J | LUNT BRIAN R | 114 SIXTH STREET | DOVER | NH | 03820 |
| 34013-D00000 | 102 B SIXTH ST | VERSCHUEREN JAMES TRUSTEE | VERSCHUEREN JAMES REVOCABLE LIVING TRUST | 102 B SIXTH ST | DOVER | NH | 03820 |
| 34014-000000 | 120 SIXTH ST | NAGEL MICHAEL D & | NAGEL SONJA M | 120 SIXTH ST | DOVER | NH | 03820 |
| 35056-000000 | 97 SIXTH ST | CARVILLE CAROLE A TRUSTEE | CARVILLE CAROLE REVOCABLE TRUST | 97 SIXTH STREET | DOVER | NH | 03820 |
| 35056-001000 | 2 B HILLCREST DR | CARVILLE CRAIG E | CARVILLE COLLETTE A | 2B HILLCREST ST | DOVER | NH | 03820 |
| 35056-002000 | 2 C HILLCREST DR | CARVILLE CHARLES R | | 2C HILLCREST DRIVE | DOVER | NH | 03820 |
| 35056-H00000 | 4 HILLCREST DR | SUPPLE GARRETT E & | SUPPLE JEANNE V | 4 HILLCREST DRIVE | DOVER | NH | 03820 |
| 35056-I00000 | 2 HILLCREST DR | DIONNE NORMAN J | DIONNE LORRIE J | 2 HILLCREST DR | DOVER | NH | 03820 |
| 35056-K00000 | 29 HILLCREST DR | MURRAY PATRICK M | | 17 HILLCREST DRIVE | DOVER | NH | 03820 |
| 35056-R00000 | 31 HILLCREST DR | KEENAN SUSAN E REV TRUST | KEENAN SUSAN E TRUSTEE | 31 HILLCREST DRIVE | DOVER | NH | 03820 |
| 35056-V00000 | HILLCREST DR | KEENAN SUSAN E REV TRUST | KEENAN SUSAN E TRUSTEE | 31 HILLCREST DRIVE | DOVER | NH | 03820 |
| 35058-000000 | 119 SIXTH ST | BICKFORD SANDRA TRUSTEE | BICKFORD FAMILY REVOCABLE TRUST | 119 SIXTH STREET | DOVER | NH | 03820 |
| 35058-A00000 | 117 SIXTH ST | REILLY WILLIAM P | | 117 SIXTH ST | DOVER | NH | 03820 |
| 35059-A00000 | SIXTH ST | MURRAY PATRICK M | | 29 HILLCREST DR | DOVER | NH | 03820 |
| 35074-000000 | 2 A HILLCREST DR | SMITH GORDON & SUSAN TRUSTEES | SMITH GORDON AND SUSAN REVOCABLE TRUST | 2A HILLCREST DRIVE | DOVER | NH | 03820 |
| | | TDAK & COMPANY LLC | | 9 KELSEY DRIVE | GREENLAND | NH | 03840 |
| | | BERRY SURVEYING & ENGINEERING | KENNETH A. BERRY, PE, LLS | 335 SECOND CROWN POINT ROAD | BARRINGTON | NH | 03825 |
| | | CINDY BALCIUS, CWS, CSS | STONEY RIDGE ENVIRONMENTAL LLC | 229 PROSPECT MOUNTAIN RD | ALTON | NH | 03809 |

**BERRY SURVEYING & ENGINEERING**
335 Second Crown Point Road
Barrington, NH 03825
Phone: (603) 332-2863
Fax: (603) 335-4623
www.BerrySurveying.Com
crberry@metrocast.net

April 18, 2018

City of Dover
Attention: Assistant City Planner Donna Benton
288 Central Ave
Dover, NH 03820

Re: TDAK & Company LLC
Residential Subdivision (TDR)
99 Sixth Street
Dover, NH
Tax Map 35, Lot 57

Dear Mrs. Benton,

On behalf of our client TDAK & Company LLC. (TDAK), Berry Surveying & Engineering (BS&E) is submitting for TRC to discuss a proposed development off of Sixth Street, known as Carmens Drive.

**Background and General Narrative:**

TDAK owns the parcel known as 99 Sixth Street in Dover, NH (Tax Map 35, Lot 57). BS&E has conducted an on-site survey of the parcel which includes a topographic analysis as well as a wetlands analysis. Please note there are no wetlands found on the parcel. The site contains a single brick structure which sits atop the existing hill and over looks Sixth Street. There is a wall that was constructed along the sidewalk on Sixth Street to retain this site from the municipal right of way. The parcel is 2.07 acres in size and has approximately 282 feet of frontage along Sixth Street. There are two driveways which are used to access the parcel from Sixth Street. The rear of the site slopes gently to the Hillcrest Drive neighborhood, and is generally wooded. The front of the project site contains a wooded buffer and steeper slopes.

**The Proposal:**

The proposal is to construct a private roadway up the existing westerly driveway location and wrap around the existing brick structure on the parcel. This structure has been converted to a two unit condominium. Along with the two unit condominium, the private roadway will provide access to four additional single family detached homes. The proposed homes will be part of a condo subdivision and be sold as individual units. The proposed private roadway will be approximately 345 feet long.

After careful consideration, the total of six units was determined to be the most appropriate for this project site. The existing two unit condominium and the proposed four single family homes. These units will be serviced by municipal water and sewer. This Residential Site Review utilizing TDR, will allow for the more dense use of land while still having natural wooded buffers between the subject parcels and the abutters to the north and west. The more dense construction will resemble other locations nearby on Sixth Street and allow for more modern structures to exist in the area. Due to the road location and grading, there will be no need for retaining walls or other structures, which will in turn give the overall site a more appealing look and allow for natural earth retention and stabilization.

Due to the elevation challenges of this site, a conditional use permit is requested. The proposed site layout impacts 2 locations where there are 20% or greater slopes. The first location is at the front of the site where the westerly existing driveway is located. This area will be affected by the proposed roadway. The road is proposed to go in at this location in order to use the existing foot print of the driveway already in place and it allows for less excavation due to existing driveway slopes. However, since the proposed road is wider than the existing driveway then it will impact the conservation zone at this location. The second impact location is at the rear of the roadway where a proposed house will be constructed. This location was chosen due to the layout of the site and the restrictions from setbacks and minimal distances from other proposed units. This house is located at a flatter location which will allow for less excavation and overall impact of the site.

We look forward to working with staff on this proposal.

BERRY SURVEYING & ENGINEERING

Christopher R. Berry
Principal, President

**BERRY SURVEYING & ENGINEERING**
335 Second Crown Pt. Rd., Barrington, NH 03825
(603) 332-2863 / (603) 335-4623 FAX
www.BerrySurveying.Com

**BERRY SURVEYING & ENGINEERING**
335 Second Crown Point Road
Barrington, NH 03825
Phone: (603) 332-2863
Fax: (603) 335-4623
www.BerrySurveying.Com

City of Dover Planning Department
Attention: Assistant City Planner Donna Benton
288 Central Ave
Dover, NH 03820

March 29, 2018

RE: Trip End Analysis & Design Analysis
Troy Thibodeau
6 Unit Development
99 Sixth Street

Dear Mrs. Benton:

Pursuant to the Subdivision Regulations, Berry Surveying & Engineering (BS&E) has prepared this Traffic Impact Assessment for the purpose of reviewing the following:

- Site Description & Proposal
- Sixth Street Assessment
- Trip Generation & Distribution
- Sight Distances

***Site Description & Proposal:***

The property currently contains a two family structure which has direct driveway access to Sixth Street via two driveway curb cuts. A block retaining wall with varying heights currently exists at the front of the site. A break in the wall allows for driveway access to the site. Much of the site is open, but a vegetative barrier of trees and smaller shrubs prohibits a majority of the view from Sixth Street of the property.

The proposal is to construct a private roadway system which will provide an 20 feet wide access to four single family detached houses and the two unit condominium. The position of the proposed road was chosen for constructability, as well as sight distance. The retaining wall at the front of the site will have approximately 15 feet removed to allow for expanded roadway access. This section of wall will be relocated to an area out of the proposed roadway to contain the existing grade. Once this has been done, the retaining wall will not obscure site distance in either direction. Lastly, this proposed location uses the majority of the existing driveway as an entrance position for the site.

***Sixth Street Assessment:***

Sixth Street runs between Central Ave and crosses over Route 16; it is classified as an arterial road. It has a paved width of approximately 28 feet in the area of the proposed project, and has a bituminous sidewalk on the north side. Vertical granite curbing exists on both sides of the road

in the area of the proposed project. Sixth Street has a centerline delineation as well as edge line delineation.

***Existing Trip Generation:***

Using the 9th Edition ITE Trip Generation Manual, we determined the following trip generation for the existing site. Land Use Code 230 Residential Condominium/Townhouse was used in deriving the trip generation for the existing site.

**Residential (2 Unit Condominium) Existing Trip Generation:**

Residential Condominium/Townhouse Peak Hour of Generator AM Weekday

| Total Trips | 19% Entering | 81% Exiting |
|---|---|---|
| **0.88T** | 0.17T | 0.71T |

Residential Condominium/Townhouse Peak Hour of Generator PM Weekday

| Total Trips | 64% Entering | 36% Exiting |
|---|---|---|
| **1.04T** | 0.67T | 0.37T |

Residential Condominium/Townhouse Peak Hour of Generator Saturday

| Total Trips | 54% Entering | 46% Exiting |
|---|---|---|
| **0.94T** | 0.51T | 0.43T |

Residential Condominium/Townhouse Total Weekday

| Total Trips | 50% Entering | 50% Exiting |
|---|---|---|
| **11.62T** | 5.81T | 5.81T |

It is assumed that there is a fairly even split between trips going east and west on Sixth Street.

***Existing Vehicular Speeds:***

Sixth Street has a posted speed limit of 30 MPH. Based on comments by the TRC speeds in the area of the project site can be excessive at times, and for the purposes of this study it is assumed that the 85th percentile speed is 45 MPH.

***Trip Generation:***

The 9th Edition ITE Trip Generation Manual was used to determine the volume of trips, as well as the percentage of entrance-to-exit traffic experienced at the AM & PM Peak hour between 7 and 9 AM and 4 and 6 PM. Additionally, Saturday peak hours of the generator and the total daily weekday trips are provided. Land Use Codes 210 Single-Family Detached Housing, and 230 Residential Condominium/Townhouse were used in deriving the trip generation for the proposed site.

**Residential Trip Generation (4 Single-Family Detached Houses):**

Single-Family Detached Housing Peak Hour of Generator AM Weekday

| Total Trips | 24% Entering | 76% Exiting |
|---|---|---|
| **3.08T** | 0.80T | 2.28T |

Single-Family Detached Housing Peak Hour of Generator PM Weekday

| Total Trips | 64% Entering | 36% Exiting |
|---|---|---|
| **4.08T** | 2.61T | 1.47T |

Single-Family Detached Housing Peak Hour of Generator Saturday

| Total Trips | 54% Entering | 46% Exiting |
|---|---|---|
| **3.72T** | 2.01T | 1.71T |

Single-Family Detached Housing Total Weekday

| Total Trips | 50% Entering | 50% Exiting |
|---|---|---|
| **38.08T** | 19.04T | 19.04T |

**Residential Trip Generation (2 Condominium Units Existing):**

Residential Condominium/Townhouse Peak Hour of Generator AM Weekday

| Total Trips | 19% Entering | 81% Exiting |
|---|---|---|
| **0.88T** | 0.17T | 0.71T |

Residential Condominium/Townhouse Peak Hour of Generator PM Weekday

| Total Trips | 64% Entering | 36% Exiting |
|---|---|---|
| **1.04T** | 0.67T | 0.37T |

Residential Condominium/Townhouse Peak Hour of Generator Saturday

| Total Trips | 54% Entering | 46% Exiting |
|---|---|---|
| **0.94T** | 0.51 T | 0.43T |

Residential Condominium/Townhouse Total Weekday

| Total Trips | 50% Entering | 50% Exiting |
|---|---|---|
| **11.62T** | 5.81T | 5.81T |

**Combined Trip Generation:**

(Combined Volumes) Peak Hour of Generator AM Weekday

| Total Trips | 23% Entering | 77% Exiting |
|---|---|---|
| **3.96T** | 1.24T | 4.27T |

(Combined Volumes) Peak Hour of Generator PM Weekday

| Total Trips | 64% Entering | 36% Exiting |
|---|---|---|
| **5.12T** | 3.28T | 1.84T |

(Combined Volumes) Peak Hour of Generator Saturday

| Total Trips | 54% Entering | 46% Exiting |
|---|---|---|
| **4.66T** | 2.52T | 2.14T |

(Combined Volumes) Total Weekday Volume

| Total Trips | 50% Entering | 50% Exiting |
|---|---|---|
| **47.90T** | 24.85T | 24.85T |

As expected, there is an increase in trip generation across all analysis periods. Based on our analysis, we expect to see a weekday AM peak increase of 3.08 trips, a weekday PM peak increase of 4.08 trips, a weekend peak hour increase of 3.72 trips, and a total weekday increase of 36.28 trips. This nominal increase will not impact surrounding intersection performance.

***Sight Distance & Safety Analysis:***

The existing site is free of obstructions, and the location of the proposed roadway provides clear sight distances in excess of 344 feet in both directions on Sixth Street, as illustrated in the Sight Distance Plan included in the submitted plan set. The AASHTO Geometric Design Manual of highways and streets (Exhibit 3-2) requires 344 feet of stopping site distance on 3% upgrades for speeds of 45 MPH.

*Elements of Design*

| Metric | | | | | | | US Customary | | | | | | |
|---|---|---|---|---|---|---|---|---|---|---|---|---|---|
| Design speed (km/h) | Stopping sight distance (m) | | | | | | Design speed (mph) | Stopping sight distance (ft) | | | | | |
| | Downgrades | | | Upgrades | | | | Downgrades | | | Upgrades | | |
| | 3 % | 6 % | 9 % | 3 % | 6 % | 9 % | | 3 % | 6 % | 9 % | 3 % | 6 % | 9 % |
| 20 | 20 | 20 | 20 | 19 | 18 | 18 | 15 | 80 | 82 | 85 | 75 | 74 | 73 |
| 30 | 32 | 35 | 35 | 31 | 30 | 29 | 20 | 116 | 120 | 126 | 109 | 107 | 104 |
| 40 | 50 | 50 | 53 | 45 | 44 | 43 | 25 | 158 | 165 | 173 | 147 | 143 | 140 |
| 50 | 66 | 70 | 74 | 61 | 59 | 58 | 30 | 205 | 215 | 227 | 200 | 184 | 179 |
| 60 | 87 | 92 | 97 | 80 | 77 | 75 | 35 | 257 | 271 | 287 | 237 | 229 | 222 |
| 70 | 110 | 116 | 124 | 100 | 97 | 93 | 40 | 315 | 333 | 354 | 289 | 278 | 269 |
| 80 | 136 | 144 | 154 | 123 | 118 | 114 | 45 | 378 | 400 | 427 | 344 | 331 | 320 |
| 90 | 164 | 174 | 187 | 148 | 141 | 136 | 50 | 446 | 474 | 507 | 405 | 388 | 375 |
| 100 | 194 | 207 | 223 | 174 | 167 | 160 | 55 | 520 | 553 | 593 | 469 | 450 | 433 |
| 110 | 227 | 243 | 262 | 203 | 194 | 186 | 60 | 598 | 638 | 686 | 538 | 515 | 495 |
| 120 | 263 | 281 | 304 | 234 | 223 | 214 | 65 | 682 | 728 | 785 | 612 | 584 | 561 |
| 130 | 302 | 323 | 350 | 267 | 254 | 243 | 70 | 771 | 825 | 891 | 690 | 658 | 631 |
| | | | | | | | 75 | 866 | 927 | 1003 | 772 | 736 | 704 |
| | | | | | | | 80 | 965 | 1035 | 1121 | 859 | 817 | 782 |

**Exhibit 3-2. Stopping Sight Distance on Grades**

As previously discussed, it was determined that speeds in the area of the project site can be excessive, and for the purposes of this study it is assumed that the 85$^{th}$ percentile speed is 45 MPH as opposed to the posted 30 MPH. From this determination, the requirement of 344 feet of stopping sight distance in each direction will be sufficient for this proposed roadway. There is no horizontal or vertical obstruction that prevent sight distance in the westerly direction for more than 375 feet. The requirement of 344 feet of sight distance in the easterly direction is achieved.

Respectfully Submitted,

BERRY SURVEYING & ENGINEERING

Christopher R. Berry SIT
Principal, President

Kenneth A. Berry, PE, LLS,
CPSWQ, CPESC, CESSWI
Principal, VP-Technical Operations

BOUNDARY & TOPOGRAPHIC SURVEYING
CIVIL ENGINEERING
SITE DESIGN
BERRY SURVEYING & ENGINEERING
SEPTIC SYSTEM DESIGN
WETLANDS PERMITTING
SHORELAND PROTECTION PERMITTING

**BERRY SURVEYING & ENGINEERING**
335 Second Crown Pt. Rd., Barrington, NH 03825
(603) 332-2863 / (603) 335-4623 FAX
www.BerrySurveying.Com

# TECHNICAL REVIEW COMMITTEE MINUTES - P18-07

CITY OF DOVER

| | |
|---|---|
| Application Type: | Subdivision |
| Applicant(s): | TDAK & Company, LLC |
| Owner(s): | TDAK & Company, LLC |
| Location: | 99 Sixth Street (Tax Map 35, Lot 57) |
| Date: | April 5, 2018 |

**INTENT:** To construct a 20-ft. wide private access way to existing two-family dwelling and construct four single-family dwellings in a subdivision (condominium lots).

**LOTS/UNITS PROPOSED:** Four new for six total dwelling units on one lot

**AGENDA ITEM #:** 1

**ACREAGE:** 2.07 acres (90,322 sq. ft.)

**ZONING DISTRICT:** R-12

**EXISTING LAND USE:** Two-family dwelling

**SURROUNDING LAND USE:** Single-family dwellings, vacant lot

**ZBA ACTION:** H79-32 variance granted to permit conversion of barn into two-family dwelling

**PERMITS REQUIRED:** EPA Notice of Intent
NHDES Sewer Discharge

**WAIVERS REQUESTED:**
**155-53.G:** - 10% roadway grade where 8% max is permitted and maximum slope exceeding 3% within 75' of intersection
**155-33.B:** no sidewalks or curbs provided

**ATTENDANCE:**
**Members:** Chris Parker, Planning
Elena Piekut, Planning/Zoning
Dave White, Engineering
Sgt. Marn Speidel, Police
Dan Barufaldi, Economic Development
Frank Torr, Planning Board

**Others:** Chris Berry, Berry Surveying & Engineering
James Hayden, Berry Surveying & Engineering
Troy Thibodeau, Applicant

Approval of 2/22/2018 Meeting Minutes
Dave White moved to approve the minutes of February 22, 2018. Dan Barufaldi seconded. Vote: U/A.

**PLAN REVIEW:**
**Planning Comments:**
- Impact fees and water/sewer investment fees will be assessed.
- Submit letters from utilities regarding ability to provide service to the development
- Provide HOA documents/restrictive covenants
- Remove road length waiver request
- Payment for transfer of development rights will be a condition of approval to be met prior to signing of plans
- A contribution to the Community Trail is agreed to if sidewalks waiver is granted
- Please revise plan set to:
  - Refer to as a subdivision on cover sheet (and throughout as needed); first confirm with SCRD that this will be acceptable
  - Add proposed side and rear setbacks if readily available
  - Add asterisks on sheets to be recorded
  - Show 50' road right-of-way (25' currently shown on Sheet 6)
  - Ensure all common subdivision plan notes are included
  - Include wetland scientist's stamp

**Police Department Comments:**
- All have been addressed.

**Fire/Inspections Comments:**
- Clarify snow storage at end of proposed road. Note 42 sheet 5
- Provide turning template for truck T-1 and clarify site access.
- Clarify note 48 sheet 5 regarding type of sprinkler system. Clarify if note is for all buildings

**Engineering Comments:**
- Conditions of approval should include:
  - Base pavement completed prior to first Certificate of Occupancy
  - Top pavement completed prior to final Certificate of Occupancy or within five years, whichever occurs first

**Economic Development Comments:**
- LP is an expensive heating fuel, not in keeping with affordable intent

| | |
|---|---|
| Application Type: | Subdivision |
| Applicant(s): | TDAK & Company, LLC |
| Owner(s): | TDAK & Company, LLC |
| Location: | 99 Sixth Street (Tax Map 35, Lot 57) |
| Date: | April 5, 2018 |

**Planning Board Comments:**

- Add snow storage areas
- Remove Sunday construction hours

**Next Steps:**

Possible initial meeting May 8th, at which staff will recommend tabling for site walk. Conditional Use Permit required for steep slopes, Conservation Commission meeting is May 14th.

Motion to adjourn at 12:10 by Dave White and seconded by Marn Speidel. Vote: U/A

**BERRY SURVEYING & ENGINEERING**
335 Second Crown Point Road
Barrington, NH 03825
Phone: (603) 332-2863
Fax: (603) 335-4623
www.BerrySurveying.Com

April 18, 2018

City of Dover
288 Central Ave
Dover, NH 03820

Re: Subdivision Review
Berry Surveying & Engineering
TDAK & Company LLC
99 Sixth Street (Tax Map 35 Lot 57)

Based on comments from the Technical Review Committee Minutes P18-07, we respectfully submit the following comments and revisions. Our comments are in **bold**.

**PLANNING COMMENTS**

1. Impact fees and water and sewer investment fees will be assessed.
**No comment required.**

2. Submit letters from utilities regarding ability to provide service to the development.
**Letters from utilities will be provided when acquired.**

3. Provide HOA documents/restrictive covenants.
**HOA documents will be submitted for final review and signature.**

4. Remove road length waiver request.
**Waiver request has been removed from the waiver request form.**

5. Payment for transfer of development rights will be a condition of approval to be met prior to signing of plans.
**Payment for TDR will be made prior to final signatures.**

6. A contribution to the Community Trail is agreed to if sidewalks waiver is granted.
**Contribution will be made upon granting the waiver.**

7. Please revise plan set to:

- Refer to as a subdivision on cover sheet (and throughout as needed); first confirm with SCRD that this will be acceptable.
  **Cover sheet has been changed to read subdivision. As well as the title block, SCRD will accept the condo subdivision.**

- Add proposed side and rear setbacks if readily available.
  **Plan has been adjusted to show the easterly property line. More dimensions are included on the site plan, see sheet 4.**

- Add asterisks on sheets to be recorded
  **Asterisks have been added on sheets to be recorded, see cover page.**

- Show 50′ road right-of-way (25′ currently shown on Sheet 6)
  **Waiver request has been included for a 30′ right of way. See waiver request form.**

- Ensure all common subdivision plan notes are included.
  **All common subdivision notes have been added, see sheet 4.**

- Include wetland scientist's stamp
  **Wetland scientist stamp is included on the site specific soils map, see sheet 3. Final stamp and signatures will be provided prior to plan certification.**

**FIRE/INSPECTIONS COMMENTS**

1. Clarify snow storage at end of proposed road. Note 42 Sheet 5.
   **Note 45 on sheet 4 has been updated, such that the snow will be stored in the right of ways, in addition to the end of the turn around and the roadway.**

2. Provide turning template for Truck 1 and clarify site access.
   **Turning template sheet has been updated.**

3. Clarify note 48 Sheet 5 regarding type of sprinkler system. Clarify if note is for all buildings.
   **Note 26 on sheet 4 has been modified to indicate the sprinkler is for the duplex only, not the proposed single family homes.**

BERRY SURVEYING & ENGINEERING
335 Second Crown Pt. Rd., Barrington, NH 03825
(603) 332-2863 / (603) 335-4623 FAX
www.BerrySurveying.Com

## ENGINEERING COMMENTS

1. LP is an expensive fuel, not in keeping with affordable intent.
**LP is shown but the applicant if looking into more affordable avenues. Unitil does not usually serve smaller neighborhoods, such as the one being proposed.**

## PLANNING BOARD COMMENTS

1. Add snow storage areas.
**Snow storage is called out on the site plan and specified in the notes, see sheet 4, and note 45.**

2. Remove Sunday construction hours.
**Note 47 on sheet 4 has been adjusted to indicate there will be no Sunday construction hours for the site work.**

Very truly yours,
BERRY SURVEYING & ENGINEERING

Christopher R. Berry, Project Manager

**BERRY SURVEYING & ENGINEERING**
335 Second Crown Pt. Rd., Barrington, NH 03825
(603) 332-2863 / (603) 335-4623 FAX
www.BerrySurveying.Com

**BERRY SURVEYING & ENGINEERING**
335 Second Crown Point Road
Barrington, NH 03825
Phone: (603) 332-2863
Fax: (603) 335-4623
www.BerrySurveying.Com

April 18, 2018

City of Dover Planning Board
Attn: Christopher Parker Assistant City Manager
288 Central Ave
Dover, NH 03820

RE: Proposed Subdivision using the Affordable TDR
Troy Thibodeau
Sixth Street
Waiver Request(s)

Mr. Chairperson & Members of the Dover Planning Board:

**In accordance with to the subdivision standards Article 155-51 following waivers are hereby requested:**

1. **Identification of Waiver Request**:
   - Propose a 10% roadway grade where an 8% grade is required.

2. **Explanation:**

The applicant is proposing to build a private road on the westerly side of the parcel to access the proposed affordable housing development. The proposed roadway will have a grade of 10%, which exceeds the allowable 8% grade.

3. **Waiver Justification**:

**a. Granting the waiver will properly carry out the purpose and intent of the regulations.**

The purpose and intent is to allow for a roadway and building envelope that fit around the existing land conditions. In this case, it is our assessment that allowing for the 10% grade will allow for the construction of a safe road without having to excavate an excessive amount of material to construct it. In addition to this, the proposed road designed was reviewed by safety officials and was determined that a 10% grade would be allowable for this site given the location of the road and the existing steepness of the site.

**b. Strict conformity to the regulations would pose an unnecessary hardship to the applicant.**

Strict conformity would require the applicant to remove a large amount of material from the site to build the road. The more excavation that is required will only result in a longer construction time frame and a more commercial appearance.

1. **Identification of Waiver Request**:

- Proposed development of a road with a maximum slope exceeding 3% within 75' of the intersection.

2. **Explanation:**

The applicant is proposing to construct the private road on a parcel with steeper front slopes. The roadway is proposed to have a maximum grade at 60' instead of 75'.

3. **Waiver Justification**:

**a. Granting the waiver will properly carry out the purpose and intent of the regulations.**

Given the steepness of the slopes and current conditions of the site, a meeting was held with safety officials to determine the safest solution for the proposed roadway. Upon meeting with them it was determined that the proposed roadway would allow for safety vehicles to enter and exit the development without the potential to bottom our or get stuck at the entrance. In addition to this a turning template was provided to show that the safety vehicles could access the site without issue. Furthermore, the proposed roadway will provide vast improvements to existing driveway and allow for more accessibility to the rear of site.

**b. Strict conformity to the regulations would pose an unnecessary hardship to the applicant.**

Given the steepness of the site and the amount of excavation that would be required to meet this regulation, strictly enforcing this regulation would pose an unnecessary hardship to the applicant.

**Identification of Waiver Request**:

- Proposed a roadway that will not have sidewalks or curbs

2. **Explanation:**

The applicant is proposing to construct the private road without curbing or sidewalks on either side. Due to the steep slopes and position of the drainage, a sidewalk would not be feasible. Low impact development methods are utilized, which do not permit curbs.

3. **Waiver Justification**:

**a. Granting the waiver will properly carry out the purpose and intent of the regulations.**

The applicant has met with TRC to discuss various ways to mitigate the lack of sidewalk and curbing along the roadway. Given the short road, and short connectivity to existing walks, internal walkways do not seem necessary.

BERRY SURVEYING & ENGINEERING
335 Second Crown Pt. Rd., Barrington, NH 03825
(603) 332-2863 / (603) 335-4623 FAX
www.BerrySurveying.Com

**b. Strict conformity to the regulations would pose an unnecessary hardship to the applicant.**

Strict conformity to this regulation would impose an unnecessary hardship to the applicant due to the low impact development design, the additional cross sectional area that would be removed, and added infrastructure in a project that is proposing to use the affordable TDR. For the addition of 4 single family homes, on a development where there are 6 total units, the sidewalk seems unnecessary given the extremely low traffic volume on the proposed road.

Thank you for your time and attention to this matter and we hope you look favorably upon the request.

**Identification of Waiver Request:**

- Proposed a 30' right of way, where a 50' right of way is required.

**2. Explanation:**

The applicant is proposing to construct a private roadway with a 30' right of way. This road location and design was deemed to be the most optimum, due to the location of the existing building and the topography.

**3. Waiver Justification:**

**a. Granting the waiver will properly carry out the purpose and intent of the regulations.**

The applicant is proposing a condo subdivision plan which creates an open right of way that is large enough to accommodate the proposed infrastructure of the private road. Given that this is all common land, there is no effective difference between a 50' right of way or the proposed 30' right of way.

**b. Strict conformity to the regulations would pose an unnecessary hardship to the applicant.**

Strict conformity would force the applicant to build the homes further from the edge of the proposed pavement. This will change the look and feel the development is trying to create.

Thank you for your time and attention to this matter and we hope you look favorably upon the requests.

BERRY SURVEYING & ENGINEERING

James F. Hayden
Project Engineer

BOUNDARY & TOPOGRAPHIC SURVEYING
CIVIL ENGINEERING
SITE DESIGN
BERRY SURVEYING & ENGINEERING
SEPTIC SYSTEM DESIGN
WETLANDS PERMITTING
SHORELAND PROTECTION PERMITTING

**BERRY SURVEYING & ENGINEERING**
335 Second Crown Pt. Rd., Barrington, NH 03825
(603) 332-2863 / (603) 335-4623 FAX
www.BerrySurveying.Com

# CARMENS WAY
# SUBDIVISION PLAN
# TRANSFER OF DEVELOPMENT RIGHTS
# TDAK & COMPANY LLC
# 99 SIXTH STREET
# DOVER, N.H.
# TAX MAP 35, LOT 57

***TABLE OF CONTENTS:***


SHEET 1 ~ NEIGHBORHOOD PLAN
SHEET 2 ~ EXISTING CONDITIONS PLAN
SHEET 3 ~ SITE SPECIFIC SOILS MAP
SHEET 4 ~ SITE PLAN
SHEET 5 ~ LANDSCAPING DESIGN
SHEET 6 ~ CONDO SUBDIVISION*
SHEET 7 ~ GRADING & DRAINAGE PLAN
SHEET 8 ~ ROAD DESIGN PLAN
SHEET 9 ~ EROSION & SEDIMENT CONTROL PLAN
SHEET 10 ~ UTILITY PLAN
SHEET 11 ~ ENTRANCE SIGHT DISTANCE PROFILE EAST BOUND LANE
SHEET 12 ~ ENTRANCE SIGHT DISTANCE PROFILE WEST BOUND LANE
SHEET 13 ~ CROSS SECTIONS 0+00 TO END
SHEET 14 ~ E101–SEDIMENT & EROSION DETAILS
SHEET 15 ~ E102–SEDIMENT & EROSION DETAILS
SHEET 16 ~ D101–DRAINAGE DETAILS
SHEET 18 ~ C101–CONSTRUCTION DETAILS
SHEET 18 ~ C102–CONSTRUCTION DETAILS
SHEET 19 ~ U101–UTILITY DETAILS
SHEET 20 ~ U102–UTILITY DETAILS
SHEET 21 ~ L101–LANDSCAPING DETAILS
SHEET 22 ~ TURNING TEMPLATE


***ASTERISKS NEXT TO PLAN INDICATES IT IS TO BE RECORDED.***

NOTE:

BERRY SURVEYING & ENGINEERING HAS PREPARED AN INSPECTION & MAINTENANCE MANUAL AS PART OF THIS PROJECTS DOCUMENTATION. ALL USERS ARE BOUND TO THIS DOCUMENT AS PART OF THE APPROVAL OF THE PLANNING BOARD. COPIES OF THE YEARLY INSPECTIONS ARE TO BE DELIVERED TO THE CITY OF DOVER COMMUNITY SERVICES DEPARTMENT.


OWNER: TDAK & COMPANY LLC
9 KELSEY DRIVE
GREENLAND, NH 03840

APPLICANT: TDAK & COMPANY LLC
9 KELSEY DRIVE
GREENLAND, NH 03840

SURVEYOR OF RECORD: KENNETH A. BERRY, PE, LLS
CPSWQ. CPESC, CESSWI,
BERRY SURVEYING & ENGINEERING
335 SECOND CROWN POINT ROAD
BARRINGTON, NH 03825
(603) 332–2863

ENGINEER OF RECORD: KENNETH A. BERRY, PE, LLS
CPSWQ, CPESC, CESSWI,
BERRY SURVEYING & ENGINEERING
335 SECOND CROWN POINT ROAD
BARRINGTON, NH 03825
(603) 332–2863

WETLAND SCIENTIST: STONEY RIDGE ENVIRONMENTAL
CYNTHIA M. BALCIUS, CSS, CWS, CPESC
229 PARKER MOUNTAIN ROAD
ALTON, NH 03809
(603)–776–5825

SOIL SCIENTIST: STONEY RIDGE ENVIRONMENTAL
CYNTHIA M. BALCIUS, CSS, CWS, CPESC
229 PARKER MOUNTAIN ROAD
ALTON, NH 03809
(603)–776–5825


***LOCATION PLAN***
DOVER, NH
NOT TO SCALE

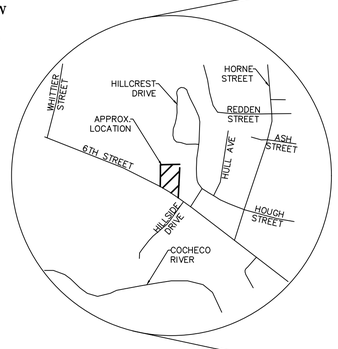


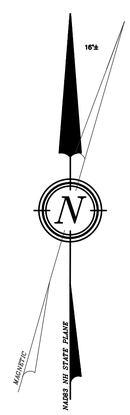


***VICINITY SKETCH***
DOVER, NH
SCALE: 1" = 100' ±

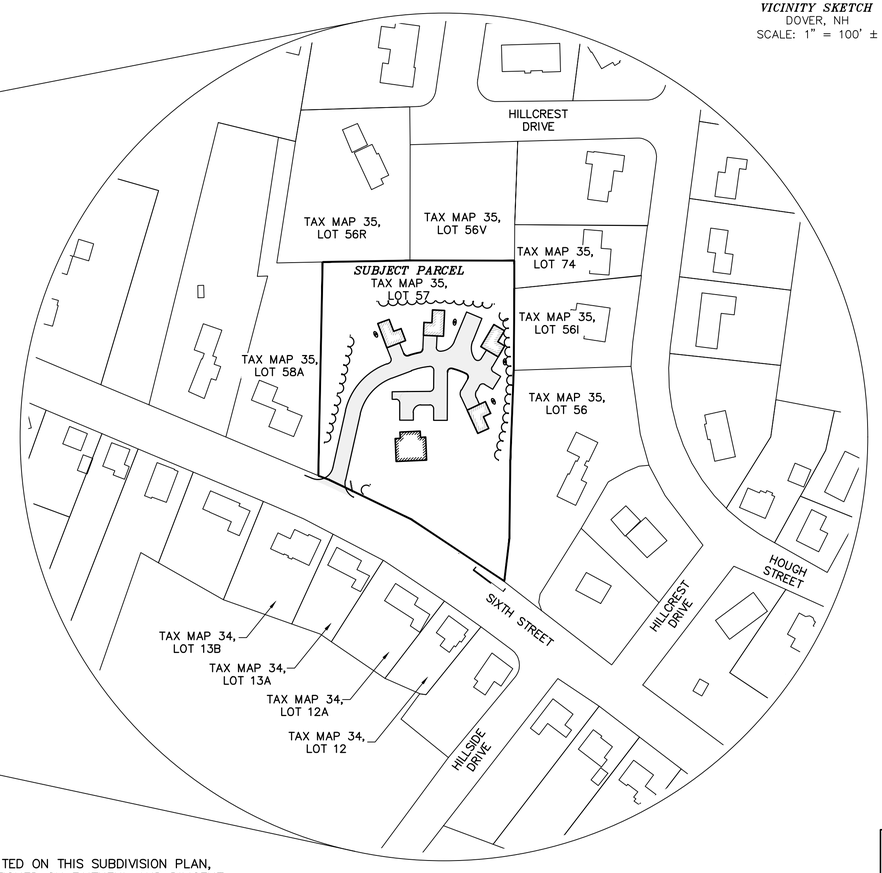


***REQUIRED PERMITS:***

1.) NHDES SEWER DISCHARGE PERMIT

***GENERAL PLAN SET NOTES:***

1.) 11x17" PLANS ARE HALF THE PUBLISHED SCALE.

2.) ALL PLANS ARE CONSIDERED TO BE NOT FOR CONSTRUCTION UNLESS THEY CONTAIN THE APPROVAL STAMP OF THE CITY OF DOVER.

WHETHER OR NOT OTHERWISE EXPRESSLY RECITED ON THIS SUBDIVISION PLAN, THE SUB PLAN APPROVAL GRANTED IS CONDITIONED ON FAITHFUL AND DILIGENT ADHERENCE BY THE OWNER/SUBDIVIDER/DEVELOPER OF ALL TERMS, CONDITIONS, PROVISIONS AND SPECIFICATIONS OF THE CITY OF DOVER LAND SITE PLAN REGULATIONS AS AMENDED OR AS MAY LATER BE AMENDED, IN EFFECT ON THE DATE OF APPROVAL, UNLESS OR EXCEPT INSOFAR AS EXPRESSLY WAIVED, IN ANY PARTICULAR, BELOW. NON – ADHERENCE MAY RESULT IN A REVOCATION OF APPROVAL. ANY VARIATION FROM THE APPROVED PLAN WILL REQUIRE A RESUBMISSION FOR SUB PLAN APPROVAL.

STATE OF NEW HAMPSHIRE
No. 805
KENNETH A. BERRY
LICENSED LAND SURVEYOR
SIGNATURE

STATE OF NEW HAMPSHIRE
KENNETH A. BERRY
No. 9243
LICENSED
PROFESSIONAL ENGINEER

DOVER FILE #P18–07

| REVISION | DATE | DESCRIPTION |
|---|---|---|
| #1 | 4–16–18 | REVISED PER TRC COMMENTS OF 4–5–18 |

RESIDENTIAL SUBDIVISION REVIEW
RESIDENTIAL SUBDIVISION REVIEW
LAND OF
TDAK & COMPANY LLC
99 SIXTH STREET
DOVER, N.H.
*TAX MAP 35, LOT 57*


BERRY SURVEYING & ENGINEERING
335 SECOND CROWN POINT ROAD
BARRINGTON, NH 03825 (603)332–2863


SCALE : AS SHOWN
DATE : MARCH 28, 2018
FILE NO. : DB 2017–060

***EXISTING LEGEND:***

- IRON BOUND ~TBS~
- IRON BOUND ~FND~
- GRANITE BOUND ~FND~
- STONE BOUND ~FND~
- UTILITY POLE
- GUY WIRE
- CURB STOP
- GATE VALVE
- GAS VALVE
- FIRE HYDRANT
- CATCH BASIN
- SEWER MANHOLE
- DRAIN MANHOLE
- SINGLE POST SIGN
- TEST PIT
- TREE
- BUILDING SETBACK LINE
- WATER LINE
- OVERHEAD UTILITIES
- SOILS LINE
- EXISTING CONTOUR MINOR
- EXISTING CONTOUR MAJOR
- EXISTING CULVERT PIPE

***PROPOSED LEGEND:***

- UTILITY POLE
- UTILITY PADS
- SEWER MANHOLE
- WATER SHUT OFF / VALVE
- HYDRANT
- THRUST BLOCK
- LIGHTING
- CATCH BASIN / DRAIN MANHOLE
- SIGNAGE
- LAMP
- CONTOUR MINOR
- CONTOUR MAJOR
- SPOT GRADE
- CULVERT W/ FLARED END SECTION (F.E.S.)
- FOUNDATION DRAIN
- DETAIL SHEET / DETAIL
- TREE LINE
- CENTER LINE
- UNDERGROUND UTILITY TRANSFORMER / J.BOX
- UNDER DRAIN
- WATER LINE
- SEWER LINE
- SILT FENCE / EROSION MIX BERM
- FILTREXX 12" SILT SOXX
- FILTREXX 8" SILT SOXX
- ORANGE CONSTRUCTION PERIMETER FENCE
- EASEMENT
- MULCH BERM
- STOCK PILE
- CHECK DAM
- HAY BALE

***ABBREVIATION LEGEND:***

| | |
|---|---|
| S.G.C. | SLOPED GRANITE CURB |
| V.G.C. | VERTICAL GRANITE CURB |
| E.O.P. | EDGE OF PAVEMENT |
| B.C.C. | BITUMINOUS CONCRETE CURB |
| BITUM. | BITUMINOUS |
| E.O.P. | EDGE OF PAVEMENT |
| E.S.H.W.T | ESTIMATE SEASONAL HIGH WATER TABLE |
| TYP. | TYPICAL |
| T. BLOCK | THRUST BLOCK |
| CONC. | CONCRETE |
| U.G.E. | UNDER GROUND ELECTRIC / UTILITY |
| U.D. | UNDER DRAIN |
| F.E.S. | FLARED END SECTION |
| HDPE | HIGH DENSITY POLYETHYLENE |
| RCP | REINFORCED CONCRETE PIPE |
| F.G. | FINISHED GRADE |
| E.G. | EXISTING GRADE |
| T.W. | TRAVELED WAY |
| T.B.R. | TO BE REMOVED |
| '/. | FEET / FEET |

{ } SSL ( ) ~ {SIZE} SINGLE SOLID LINE (COLOR W=WHITE, Y=YELLOW)
{ } DSL ( ) ~ {SIZE} DOUBLE SOLID LINE (COLOR W=WHITE, Y=YELLOW)
{ } SSB ( ) ~ {SIZE} SINGLE SOLID W/ BROKEN LINE (COLOR W=WHITE, Y=YELLOW)
{ } SBL ( ) ~ {SIZE} SINGLE BROKEN LINE (COLOR W=WHITE, Y=YELLOW)
{ } DBL ( ) ~ {SIZE} DOUBLE BROKEN LINE (COLOR W=WHITE, Y=YELLOW)

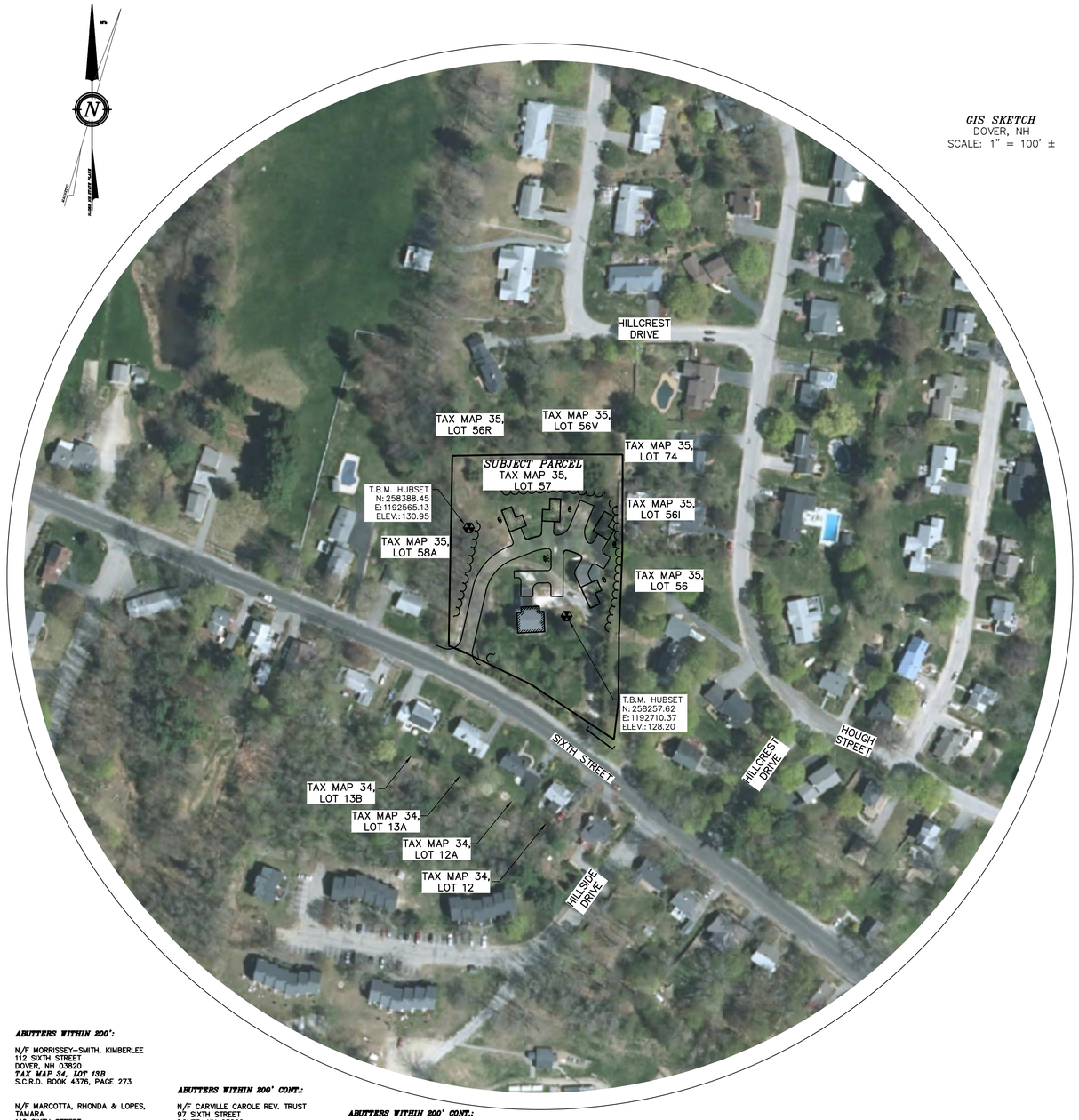


***GIS SKETCH***
DOVER, NH
SCALE: 1" = 100' ±

| SIGN ID NUMBER | SIGN SIZE (WIDTH x HEIGHT) | SIGN | TEXT DIMENSIONS | NO. OF SIGNS | BACKGROUND | LEGEND | BORDER | SYMBOL | POST SIZE & QUANTITY |
|---|---|---|---|---|---|---|---|---|---|
| R1–1 | 30"x30" | STOP | SEE STANDARD HIGHWAY SIGNS 2004 EDITION PUBLISHED BY USDOT – FHWA | 1 | RED | WHITE | WHITE | – | U–CHANNEL (1) |
| R7–1 | 24"x30" | NO PARKING FIRE LANE | SEE STANDARD HIGHWAY SIGNS 2004 EDITION PUBLISHED BY USDOT – FHWA | 3 | WHITE | BLACK | BLACK | – | U–CHANNEL (1) |
| W14–2 | 30"x30" | NO OUTLET | SEE STANDARD HIGHWAY SIGNS 2004 EDITION PUBLISHED BY USDOT – FHWA | 1 | YELLOW | BLACK | BLACK | – | U–CHANNEL (1) |

***ABUTTERS WITHIN 200':***

N/F MORRISSEY–SMITH, KIMBERLEE
112 SIXTH STREET
DOVER, NH 03820
*TAX MAP 34, LOT 13B*
S.C.R.D. BOOK 4376, PAGE 273

N/F MARCOTTA, RHONDA & LOPES, TAMARA
110 SIXTH STREET
DOVER, NH 03820
*TAX MAP 34, LOT 13A*
S.C.R.D. BOOK 2921, PAGE 35

N/F GINN, KATHERINE
644 STATE STREET
APT #4
PORTSMOUTH, NH 03801
*TAX MAP 34, LOT 12A*
S.C.R.D. BOOK 4180, PAGE 612

N/F THOMPSON, SETH & GLENN
104 SIXTH STREET
DOVER, NH 03820
*TAX MAP 34, LOT 12*
S.C.R.D. BOOK 4003, PAGE 438

N/F CARVILLE CAROLE REV. TRUST
97 SIXTH STREET
DOVER, NH 03820
*TAX MAP 35, LOT 56*
S.C.R.D. BOOK 3698, PAGE 800

***ABUTTERS WITHIN 200' CONT.:***

N/F CARVILLE CAROLE REV. TRUST
97 SIXTH STREET
DOVER, NH 03820
*TAX MAP 35, LOT 56*
S.C.R.D. BOOK 3698, PAGE 800

N/F BICKFORD FAMILY REV. TRUST
119 SIXTH STREET
DOVER, NH 03820
*TAX MAP 35, LOT 58*
S.C.R.D. BOOK 2245, PAGE 361

N/F KEENAN, SUSAN E REV TRUST
31 HILLCREST DRIVE
DOVER, NH 03820
*TAX MAP 35, LOT 56V*
S.C.R.D. BOOK 2846, PAGE 269

N/F DIONNE, NORMAN J. & LORRIE J.
2 HILLCREST DRIVE
DOVER, NH 03820
*TAX MAP 35, LOT 56I*
S.C.R.D. BOOK 2324, PAGE 509

***ABUTTERS WITHIN 200' CONT.:***

N/F KEENAN, SUSAN E REV TRUST
31 HILLCREST DRIVE
DOVER, NH 03820
*TAX MAP 35, LOT 56R*
S.C.R.D. BOOK 2791, PAGE 869

N/F SMITH, GORDON & SUSAN REV TRUST
2A HILLCREST DRIVE
DOVER, NH 03820
*TAX MAP 35, LOT 74*
S.C.R.D. BOOK 4014, PAGE 965

N/F SUPPLE, GARRETT E. & JEANNE V.
4 HILLCREST DRIVE
DOVER, NH 03820
*TAX MAP 35, LOT 56H*
S.C.R.D. BOOK 1976, PAGE 182

N/F CARVILLE, CRAIG E. & COLLETTE A.
2B HILLCREST DRIVE
DOVER, NH 03820
*TAX MAP 35, LOT 56–1*
S.C.R.D. BOOK 1556, PAGE 112

***ABUTTERS WITHIN 200' CONT.:***

N/F VERSCHUEREN JAMES REV. LIVING TST
102B SIXTH STREET
DOVER, NH 03820
*TAX MAP 34, LOT 13D*
S.C.R.D. BOOK 4228, PAGE 552

N/F LUNT, TERESA J. & BRIAN R.
114 SIXTH STREET
DOVER, NH 03820
*TAX MAP 34, LOT 13C*
S.C.R.D BOOK 963, PAGE 410

N/F BICKFORD FAMILY REV. TRUST.
119 SIXTH STREET
DOVER, NH 03820
*TAX MAP 35, LOT 58*
S.C.R.D. BOOK 2245, PAGE 361

DOVER FILE #P18–07

| REVISION | DATE | DESCRIPTION |
|---|---|---|
| #1 | 4–16–18 | REVISED PER TRC COMMENTS OF 4–5–18 |

NEIGHBORHOOD PLAN
RESIDENTIAL SUBDIVISION REVIEW
LAND OF
TDAK & COMPANY LLC
99 SIXTH STREET
DOVER, N.H.
*TAX MAP 35, LOT 57*


BERRY SURVEYING & ENGINEERING
335 SECOND CROWN POINT ROAD
BARRINGTON, NH 03825 (603)332–2863


SCALE : AS SHOWN
DATE : MARCH 28, 2018
FILE NO. : DB 2017–060

STATE OF NEW HAMPSHIRE
No. 805
KENNETH B. BERRY
LICENSED LAND SURVEYOR
SIGNATURE

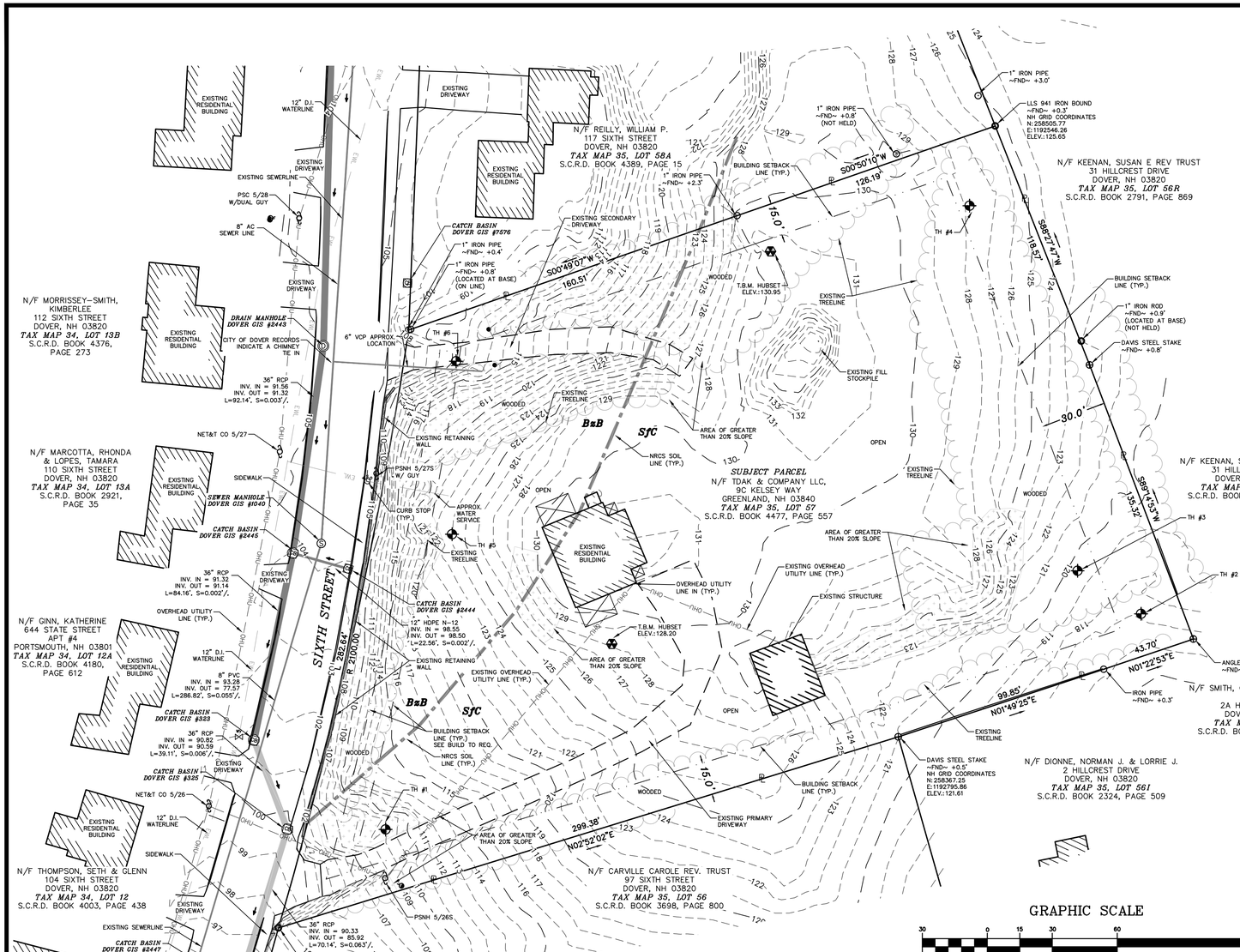


## PLAN REFERENCES:

1. "PLAN OF LAND PREPARED FOR TIMNIK, LLC"
   DATED: MARCH 25, 2016
   BY: JASON POHOPEK DESIGN & CONSTRUCTION, LLC
   UNRECORDED, ON FILE AT THIS OFFICE
2. "LOT LINE ADJUSTMENT PLAN PREPARED FOR PATRICK MURRAY TAX MAP 35, LOT NO.S 59 & 59A 125 SIXTH STREET CITY OF DOVER COUNTY OF STRAFFORD STATE OF NEW HAMPSHIRE"
   DATED: OCTOBER 24, 2013
   BY: MCENEANEY SURVEY ASSOCIATES, INC.
   S.C.R.D.: PLAN #106-081
3. "PLAN OF LAND FOR SUSAN E. KEENAN TRUSTEE OF THE SUSAN E. KEENAN REVOCABLE TRUST TAX MAP 35 LOT56V – LOT 13"
   DATED: JANUARY 28, 2012"
   BY: KENNETH E. MOORE
   S.C.R.D.: PLAN #103-031
4.) "PLAN OF SUBDIVISION FOR CAROLE A. CARVILLE SIXTH STREET & HILLCREST DRIVE DOVER, NEW HAMPSHIRE"
   BY: K.E. MOORE & B.G. STAPLES LAND SURVEYORS
   DATED: MARCH, 1990
   S.C.R.D.: PLAN #37A-144
5.) "FINAL PLAN PART OF THE CARVILLE TRACT DOVER NEW HAMPSHIRE"
   BY: G.L. DAVIS & ASSOCIATES ENGINEERS
   DATED: AUGUST 6, 1956
   S.C.R.D.: PLAN #37 POCKET #3 FOLDER #4
6.) "PLAN OF LOTS CARLTON C. & LENA B. MEAD DOVER NEW HAMPSHIRE"
   BY: G.L. DAVIS & ASSOCIATES ENGINEERS
   DATED: AUGUST 6, 1663? POCKET #1 FOLDER #2
7.) "CARVILLE TRACT FISCHER AGENCY SPONSOR DOVER, N.H."
   BY: T.W. CHESLEY
   DATED: SEPTEMBER, 1951
   S.C.R.D.: PLAN #4 POCKET #7 FOLDER #3

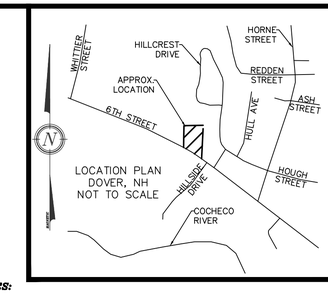


## NOTES:

1.) OWNER: TDAK & COMPANY LLC
9 KELSEY DRIVE
GREENLAND, NH 03840

2.) DOVER TAX MAP 35, LOT 57

3.) LOT AREA: 90,322 Sq. Ft. 2.07 Ac.

4.) S.C.R.D. BOOK 4477, PAGE 557

5.) ZONING: MEDIUM DENSITY RESIDENTIAL (R-12)
SETBACKS:
FRONTAGE: 100 FEET, MINIMUM
MIN. LOT AREA: 12,000 Sq. Ft.
FRONT SETBACK: 15-25 FEET (BUILD TO)
SIDE SETBACK: 15 FEET
REAR SETBACK: 30 FEET
WETLAND SETBACK: 50 FEET

6.) I HEREBY CERTIFY THAT, TO THE BEST OF MY KNOWLEDGE & BELIEF, PART OF THIS PARCEL DOES NOT FALL WITHIN THE FLOOD PLAIN FLOOD HAZARD REF.: FEMA COMMUNITY# –330145, MAP# – 33017C0310E, DATED: SEPTEMBER 30, 2015.

7.) VERTICAL DATUM BASED ON USGS NAVD88 ELEVATIONS. HORIZONTAL COORDINATES BASED ON NAD83. COORDINATES GATHERED USING TOPCON HIPER SR SURVEY GRADE GPS RECEIVERS.

8.) THE BOUNDARY LINES SHOWN ON THIS PLAN ARE THE RESULT OF A CLOSED TRAVERSE PERFORMED BY THIS OFFICE IN JUNE OF 2017, WITH AN ERROR OF CLOSURE OF GREATER THAN 1 PART IN 10,000.

9.) THE INTENT OF THIS PLAN IS TO SHOW THE EXISTING CONDITIONS OF TAX MAP 35 LOT 57.

10.) UNDERGROUND UTILITY LOCATIONS ARE BASED UPON BEST AVAILABLE EVIDENCE AND ARE NOT FIELD VERIFIED. LOCATING AND PROTECTING ANY ABOVE AND BELOW GROUND UTILITIES IS THE SOLE RESPONSIBILITY OF THE CONTRACTOR. ANY UTILITY CONFLICTS SHOULD BE REPORTED IMMEDIATELY TO THE DESIGN ENGINEER.

JURISDICTIONAL WETLANDS WERE DELINEATED BY CINDY BALCIUS OF STONEY RIDGE ENVIRONMENTAL LLC IN JULY OF 2017 UTILIZING THE FOLLOWING STANDARDS:

1) FIELD INDICATORS OF HYDRIC SOILS IN THE UNITED STATES, VERSION 7.0. 2010. L.M. VASILAS, G.W. HURT, AND C.V. NOBLE (EDS.). UNITED STATES DEPARTMENT OF AGRICULTURE, NATURAL RESOURCES CONSERVATION SERVICE, IN COOPERATION WITH THE NATIONAL TECHNICAL COMMITTEE FOR HYDRIC SOILS.
2) FIELD INDICATORS FOR IDENTIFYING HYDRIC SOILS IN NEW ENGLAND. VERSION 3. APRIL 2004. NEIWPCC WETLANDS WORKGROUP. WILMINGTON, MA 01887.
3) NORTH AMERICAN DIGITAL FLORA: NATIONAL WETLAND PLANT LIST, VERSION 2.1.0 (HTTP://WETLAND_PLANTS.USACE.ARMY.MIL). U.S. ARMY CORPS OF ENGINEERS, ENGINEER RESEARCH AND DEVELOPMENT CENTER, COLD REGIONS RESEARCH AND ENGINEERING LABORATORY, HANOVER, NH, AND BONAP, CHAPEN HILL.
4) STATE OF NEW HAMPSHIRE 2014 WETLAND PLANT LIST. LICHVAR, R.W., M. BUTTERWICH, N.C. MELVIN, AND W.N. KIRCHNER. 2014. THE NATIONAL WETLAND PLANT LIST: 2014 UPDATE OF WETLAND RATINGS. PHYTONEURON 2014-41:1-42.
5) CORPS OF ENGINEERS WETLANDS DELINEATION MANUAL. JANUARY 1987. WETLANDS RESEARCH PROGRAM TECHNICAL REPORT Y-87-1.
6) REGIONAL SUPPLEMENT TO THE CORPS OF ENGINEERS WETLAND DELINEATION MANUAL: NORTHCENTRAL AND NORTHEAST REGION. JANUARY 2012, VERSION 2. U.S. ARMY CORPS OF ENGINEERS. ENVIRONMENTAL LABORATORY ERDC/EL TR-12-1.
7) CLASSIFICATION OF WETLANDS AND DEEPWATER HABITATS OF THE UNITED STATES. DECEMBER 1979. L. COWARDIN, V. CARTER, F. GOLET, AND E. LAROE. US DEPARTMENT OF THE INTERIOR. FISH AND WILDLIFE SERVICE. FWS/OBS-79/31.

## STRUCTURES TABLE:

*SMH (DOVER GIS #1039)*
RIM = 84.74
INV. IN = 77.57 *(DOVER GIS #1040)*
INV. OUT = 76.72 *(DOVER GIS #1038)*

*SMH (DOVER GIS #1040)*
RIM = 104.18
INV. IN = 93.43 *(DOVER GIS #1041)*
INV. OUT = 93.28 *(DOVER GIS #1039)*

*SMH (DOVER GIS #1041)*
RIM = 102.85
IN = 94.82
INV. OUT = 94.75 *(DOVER GIS #1040)*

*CB (DOVER GIS #347)*
RIM = 91.92
INV. OUT = 85.37 *(CB DOVER GIS #2446)*

*CB (DOVER GIS #2446)*
RIM = 91.74
INV. IN = 83.39 *(CB DOVER GIS #2447)*
INV. IN = UNABLE TO DETERMINE *(CB DOVER GIS #347)*
INV. OUT = 83.24 *(CB DOVER GIS #575)*

*CB (DOVER GIS #2447)*
RIM = 95.44
INV. IN = 85.92 *(CB DOVER GIS #325)*
INV. OUT = 85.49 *(CB DOVER GIS #2446)*

## STRUCTURES TABLE CONT.:

*CB (DOVER GIS #325)*
RIM = 99.83
INV. IN = 90.59 *(CB DOVER GIS #323)*
INV. OUT = 90.33 *(CB DOVER GIS #2447)*

*CB (DOVER GIS #323)*
RIM = 101.29
INV. IN = 91.14 *(CB DOVER GIS #2445)*
INV. OUT = 90.82 *(CB DOVER GIS #325)*

*CB (DOVER GIS #2445)*
RIM = 103.84
INV. IN = 98.50 *(CB DOVER GIS #2444)*
INV. IN = 91.56 *(DMH DOVER GIS #2443)*
INV. OUT = 91.32 *(CB DOVER GIS #323)*

*CB (DOVER GIS #2444)*
RIM = 103.90
INV. OUT = 98.55 *(CB DOVER GIS #2445)*

*DMH (DOVER GIS #2443)*
RIM = 104.81
INV. IN = 92.54 *(CB DOVER GIS #283)*
INV. OUT = 92.14 *(CB DOVER GIS #2445)*

*CB (DOVER GIS #7576)*
RIM = 104.97
INV. OUT = 99.97 *(UNKNOWN DISCHARGE LOCATION)*

## LEGEND:

- ANGLE IRON/STEEL STAKE (FND)
- IRON PIPE (FND)
- IRON BOUND (FND)
- UTILITY POLE/GUY WIRE
- WATER GATE VALVE
- CURB STOP
- HYDRANT
- CATCH BASIN (CB)
- SEWER MANHOLE (SMH)
- DRAIN MANHOLE (DMH)
- BUILDING SETBACK LINE
- NRCS SOIL DELINEATION LINE
- AREA OF 20% OR GREATER SLOPE
- OVERHEAD UTILITIES LINE
- EXISTING WATER LINE
- S.C.R.D. STRAFFORD COUNTY REGISTRY OF DEEDS
- TYP. TYPICAL
- FND FOUND
- PL. PROPERTY LINE
- T.B.M. TEMPORARY BENCHMARK
- TH TEST HOLE

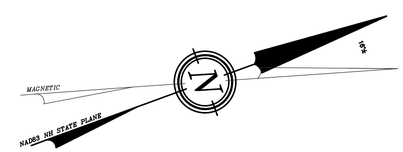


## SOILS:

*BuB* – BUXTON SILT LOAM, 3 TO 8% SLOPES
*SfC* – SUFFIELD SILT LOAM, 8 TO 15% SLOPES

SEE WEBSOIL USDA-NRCS
SEE ALSO SITE SPECIFIC SOIL SURVEY, SHEET 3 OF 21

## EXISTING BUILDING COVERAGE:

2,588 Sq. Ft., 0.06 Ac. (2.9% OF LOT)

## EXISTING IMPERVIOUS COVERAGE:

17,250 Sq. Ft., 0.40 Ac. (19.1% OF LOT)

## EXISTING AREA OF 20% OR GREATER SLOPE:

15,225 Sq. Ft., 0.35 Ac. (16.86% OF LOT)

I CERTIFY THAT THIS SURVEY PLAT IS NOT A SUBDIVISION PURSUANT TO THIS TITLE AND THAT THE LINES OF STREETS AND WAYS SHOWN ARE THOSE OF PUBLIC OR PRIVATE STREETS OR WAYS ALREADY ESTABLISHED AND THAT NO NEW WAYS ARE SHOWN.

4-48-18
KENNETH A. BERRY L.L.S. 805 DATE

I CERTIFY THAT THIS PLAT EXCEEDS THE MINIMUM REQUIREMENT FOR ACCURACY AND COMPLETENESS OF THE STATE OF N.H. AND OF THE CITY OF DOVER, N.H.– 1:10,000 –

4-18-18
KENNETH A. BERRY LLS 805 DATE

DOVER FILE #P18-07

| REVISION | DATE | DESCRIPTION |
|---|---|---|
| #1 | 4-16-18 | REVISED PER TRC COMMENTS OF 4-5-18 |

EXISTING CONDITIONS

RESIDENTIAL SUBDIVISION REVIEW
LAND OF
TDAK & COMPANY LLC
99 SIXTH STREET
DOVER, N.H.
*TAX MAP 35, LOT 57*

BERRY SURVEYING & ENGINEERING
335 SECOND CROWN POINT ROAD
BARRINGTON, NH 03825 (603)332-2863

SCALE : 1 IN. EQUALS 30 FT.
DATE : MARCH 28, 2018
FILE NO. : DB 2017-060

STATE OF NEW HAMPSHIRE LICENSED LAND SURVEYOR NO. 805 KENNETH A. BERRY
SIGNATURE

*Berry Surveying & Engineering*
*Sixth Street, Dover*
*SRE# 17-110*
*January 15, 2018*

## SITE-SPECIFIC SOIL MAP UNIT KEY

| Symbol | Map Unit | Slope Class | Drainage Class | HSG/Group |
|---|---|---|---|---|
| 38B | Eldridge Fine Sandy Loam | 3-8% slopes | Moderately Well Drained | C/3 |
| 38C | Eldridge Fine Sandy Loam | 8-15% slopes | Moderately Well Drained | C/3 |
| 38D | Eldridge Fine Sandy Loam | 15-25% slopes | Moderately Well Drained | C/3 |
| 38E | Eldridge Fine Sandy Loam | 25-50% slopes | Moderately Well Drained | C/3 |
| 38F | Eldridge Fine Sandy Loam | 50%+ slopes | Moderately Well Drained | C/3 |
| 26B | Windsor loamy fine sand | 3-8% slopes | Excessively Well Drained | A/1 |
| 26C | Windsor loamy fine sand | 8-15% slopes | Excessively Well Drained | A/1 |
| 26D | Windsor loamy fine sand | 15-25% slopes | Excessively Well Drained | A/1 |
| 26E | Windsor loamy fine sand | 25-50% slopes | Excessively Well Drained | A/1 |
| 26F | Windsor loamy fine sand | 50%+ slopes | Excessively Well Drained | A/1 |
| 699A | Urban land-buildings | 0-3% slopes | | |

"This map product is within the technical standards of the National Cooperative Soil Survey. It is a special purpose product, produced by a certified soil scientist, and is not a product of the USDA Natural Resources Conservation Service. There is a narrative report that accompanies this map and map key."

JURISDICTIONAL WETLANDS WERE DELINEATED BY CINDY BALCIUS OF STONEY RIDGE ENVIRONMENTAL LLC IN JULY OF 2017 UTILIZING THE FOLLOWING STANDARDS:

1) FIELD INDICATORS OF HYDRIC SOILS IN THE UNITED STATES, VERSION 7.0. 2010. L.M. VASILAS, G.W. HURT, AND C.V. NOBLE (EDS.). UNITED STATES DEPARTMENT OF AGRICULTURE, NATURAL RESOURCES CONSERVATION SERVICE, IN COOPERATION WITH THE NATIONAL TECHNICAL COMMITTEE FOR HYDRIC SOILS.
2) FIELD INDICATORS FOR IDENTIFYING HYDRIC SOILS IN NEW ENGLAND. VERSION 3. APRIL 2004. NEIWPCC WETLANDS WORKGROUP. WILMINGTON, MA 01887.
3) NORTH AMERICAN DIGITAL FLORA: NATIONAL WETLAND PLANT LIST, VERSION 2.1.0 (HTTP://WETLAND_PLANTS.USACE.ARMY.MIL). U.S. ARMY CORPS OF ENGINEERS, ENGINEER RESEARCH AND DEVELOPMENT CENTER, COLD REGIONS RESEARCH AND ENGINEERING LABORATORY, HANOVER, NH, AND BONAP, CHAPEN HILL.
4) STATE OF NEW HAMPSHIRE 2014 WETLAND PLANT LIST. LICHVAR, R.W., M. BUTTERWICH, N.C. MELVIN, AND W.N. KIRCHNER. 2014. THE NATIONAL WETLAND PLANT LIST: 2014 UPDATE OF WETLAND RATINGS. PHYTONEURON 2014-41:1-42.
5) CORPS OF ENGINEERS WETLANDS DELINEATION MANUAL. JANUARY 1987. WETLANDS RESEARCH PROGRAM TECHNICAL REPORT Y-87-1.
6) REGIONAL SUPPLEMENT TO THE CORPS OF ENGINEERS WETLAND DELINEATION MANUAL: NORTHCENTRAL AND NORTHEAST REGION. JANUARY 2012, VERSION 2. U.S. ARMY CORPS OF ENGINEERS. ENVIRONMENTAL LABORATORY ERDC/EL TR-12-1.
7) CLASSIFICATION OF WETLANDS AND DEEPWATER HABITATS OF THE UNITED STATES. DECEMBER 1979. L. COWARDIN, V. CARTER, F. GOLET, AND E. LAROE. US DEPARTMENT OF THE INTERIOR. FISH AND WILDLIFE SERVICE. FWS/OBS-79/31.

STONEY RIDGE ENVIROMENTAL, LLC.
CYNTHIA BALCIUS, CSS #84

STONEY RIDGE ENVIROMENTAL, LLC.
CYNTHIA BALCIUS, CWS #61

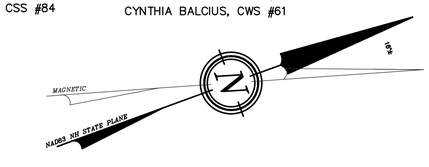


GRAPHIC SCALE

30 0 15 30 60 120

( IN FEET )
1 inch = 30 ft.

I CERTIFY THAT THIS SURVEY PLAT IS NOT A SUBDIVISION PURSUANT TO THIS TITLE AND THAT THE LINES OF STREETS AND WAYS SHOWN ARE THOSE OF PUBLIC OR PRIVATE STREETS OR WAYS ALREADY ESTABLISHED AND THAT NO NEW WAYS ARE SHOWN.

4-16-18

KENNETH A. BERRY L.L.S. 805 DATE

DOVER FILE #P18-07

| REVISION | DATE | DESCRIPTION |
|---|---|---|
| #1 | 4-16-18 | REVISED PER TRC COMMENTS OF 4-5-18 |

SITE SPECIFIC SOIL SURVEY

RESIDENTIAL SUBDIVISION REVIEW
LAND OF
TDAK & COMPANY LLC
99 SIXTH STREET
DOVER, N.H.
*TAX MAP 36, LOT 57*

BERRY SURVEYING & ENGINEERING
335 SECOND CROWN POINT ROAD
BARRINGTON, NH 03825 (603)332-2863

SCALE : 1 IN. EQUALS 30 FT.
DATE : MARCH 28, 2018
FILE NO. : DB 2017-060

STATE OF NEW HAMPSHIRE No. 805 KENNETH A. BERRY LICENSED LAND SURVEYOR
SIGNATURE

*THIS RESIDENTIAL SITE PLAN USES TRANSFER OF DEVELOPMENT (TDR) CHAPTER 170–27.2. UNITS 3 + 4 ARE TO REQUIRED TO REMAIN 1,400 SF OR LESS IN LIVING SPACE SEE CHAPTER 170.27.2 FOR OTHER USES AND RESTRICTIONS.*

*TDR UNIT CALCULATIONS*

*1.) 90,322 SF. – 15,225 SF. = 75,097*

*2.) 75,097 * .85 = 63,832.45*

*3.) 63.832.45 * .85 = 54,257.58*

*4.) 54,257.58 SF./12,000 SF. = 4.52 UNITS*

*5.) REMAINING 1.5 UNITS TO BE PURCHASED, THUS ALLOWING FOR 6 UNITS*

*GENERAL PLAN SET NOTES:*

1.) OWNER: TDAK & COMPANY LLC
9 KELSEY DRIVE
GREENLAND, NH 03840

2.) DOVER TAX MAP 35, LOT 57

3.) LOT AREA: 90,322 Sq. Ft. 2.07 Ac.

4.) S.C.R.D. BOOK 4477, PAGE 557

5.) ZONING: MEDIUM DENSITY RESIDENTIAL (R–12)
FRONTAGE ~ 100.0'
MINIMUM LOT SIZE ~ 12,000 Sq. Ft.
FRONT SETBACK ~ 15–25' (BUILD TO)
REAR SETBACK ~ 30.0'
SIDE SETBACK ~ 15'
WETLANDS BUFFER ~ 50.0'

TDR REGULATIONS
ABUTTING A ROAD SETBACK ~ 20'
ABUTTING A LOT LINE SETBACK ~ 10'
STREET SIDES OF UNITS ~ 20.0'
ABUTTING STRUCTURES ~ 20.0'

*LEGEND:*

*SEE NEIGHBORHOOD PLAN FOR MASTER LEGEND*

GRAPHIC SCALE

20 0 10 20 40 80

( IN FEET )
1 inch = 20 ft.

| OPEN SPACE REQUIREMENTS (DOVER CODE ARTICLE V , 170–15.) |
|---|
| PROPOSED NUMBER OF BEDROOMS: 12 |
| OPEN SPACE REQUIREMENT (100 SF PER BEDROOM): 1,200 SF |
| ½ OPEN SPACE FOR PASSIVE USE: 600 SF (SATISFIED ON SITE) |
| ½ OPEN SPACE FOR ACTIVE USE: 600 SF (SATISFIED ON SITE) |

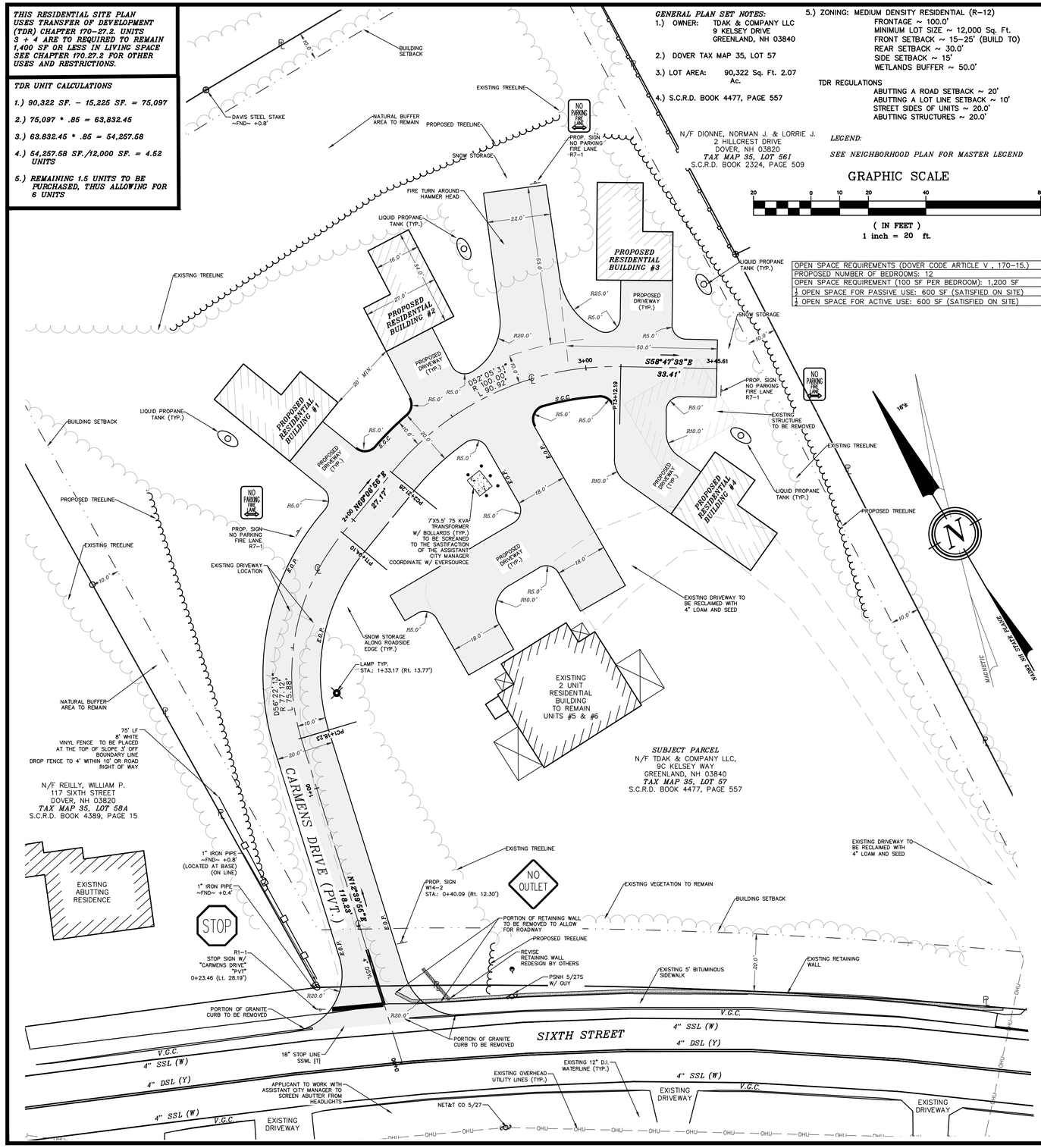


6.) THE PURPOSE OF THIS PLAN IS TO DEMONSTRATE SITE LAYOUT ITEMS AS WELL AS FINISH CONSTRUCTION ITEMS.

7.) AS–BUILT PLANS OF THE SUBDIVISION SHALL BE SUBMITTED ON PAPER AND IN DIGITAL FORMAT IN PDF AND AUTOCAD DWG, AUTOCAD DXF OR ESRI FORMAT TO THE CITY OF DOVER ENGINEER'S OFFICE OFFICE UPON COMPLETION OF PROJECT. AS BUILT PLANS SHALL BE PREPARED AND CERTIFIED CORRECT BY A L.L.S. OR P.E. DIGITAL FILES SHALL BE GEO–REFERENCED TO NEW HAMPSHIRE STATE PLANE COORDIANTES NAD83 AND SHALL BE BE EXPRESSED IN FEET.

8.) EXTERIOR LIGHTING SHALL BE CUT–OFF TYPE FIXTURES PER CHAPTER 149–14–E AND SHALL PROVIDE LIGHTING DIRECTED ON–SITE ONLY.

9.) PROPERTY LINE INFORMATION HAS BEEN OBTAINED FROM A SURVEY PREFORMED BY BERRY SURVEYING IN 2017 WITH AN ERROR NOT GREATER THAN 1 IN 10,000.

10.) DATUM: PROJECT DATUM IS BASED ON GPS COORDINATES ESTABLISHED WITH A TOPCON HIPER SR RECEIVER IN MAY 2017 AND REPRESENTED IN NEW HAMPSHIRE STATE PLANE COORDINATES NAD 1983 AND VERTICALLY BY NAVD 1988.

11.) FINAL UTILITY LOCATIONS TO BE COORDINATED BETWEEN THE CONTRACTOR, ALL APPROPRIATE UTILITY COMPANIES AND THE DOVER DPW.

12.) CONTRACTOR TO CONTACT DOVER DPW A MINIMUM OF TWO WEEKS PRIOR TO ANY CONSTRUCTION TO COORDINATE ALL WORK CONCERNING INSTALLATION OF ANY PROPOSED WATER LINE IMPROVEMENTS.

13.) ALL WATER MAIN AND SERVICE INSTALLATIONS SHALL CONFORM TO CITY OF DOVER STANDARDS.

14.) CONTRACTOR SHALL COORDINATE ALL ELECTRICAL INSTALLATIONS WITH EVERSOURCE AT (603) 436–7708. ALL ELECTRIC CONDUIT INSTALLATION SHALL BE INSPECTED BY EVERSOURCE PRIOR TO BACKFILL. A 48–HOUR MINIMUM NOTICE IS REQUIRED.

15.) THE PROPOSED US FOR THE SITE IS AFFORDABLE SINGLE FAMILY HOUSING WITH ONE DUPLEX.

16.) A LETTER OF CREDIT FOR THE COST OF REVEGETATING ALL DISTURBED AREAS ON THE SITE AND APPROVED CONSTRUCTION SIGN SHALL BE IN PLACE PRIOR TO ANY EARTH DISTURBING ACTIVITY.

17.) ALL NEW ON–SITE UTILITIES SHALL BE INSTALLED UNDERGROUND THROUGHOUT THE SITE FOR WHICH DEVELOPMENT IS PROPOSED. SITE PLANS SHALL SHOW ANY EASEMENTS FOR THESE SERVICES.

18.) THE PROPOSED SUBDIVISION WILL BE SERVED BY MUNICIPAL WATER AND SEWER.

19.) APPROVED BACKFLOW PREVENTORS SHALL BE PROVIDED FOR DOMESTIC WATER LINES.

20.) ALL MATERIALS AND CONSTRUCTION SHALL CONFORM TO APPLICABLE CITY AND STATE CODES.

21.) ALL CONSTRUCTION SHALL CONFORM TO THE STATE OF NEW HAMPSHIRE DEPARTMENT OF TRANSPORTATION STANDARD SPECIFICATIONS FOR ROAD AND BRIDGE CONSTRUCTION AND WITH THE CITY OF DOVER COMMUNITY SERVICE REGULATIONS AND STANDARD SPECIFICATIONS FOR CONSTRUCTION. THE MORE STRINGENT SPECIFICATION WILL APPLY.

22.) WETLANDS WERE DELINEATED BY CYNTHIA BALCIUS, CERTIFIED WETLANDS SCIENTIST, CERTIFICATION NUMBER 61, IN ACCORDANCE WITH CHAPTER 170–27.1 OF THE ZONING ORDINANCE IN JULY OF 2017.

23.) IF THE EARTHWORK IS PERFORMED DURING FREEZING WEATHER (NOT ALLOWED IN CITY R.O.W.), EXPOSED SUBGRADES ARE SUSCEPTIBLE TO FROST. NO FILL OR UTILITIES SHALL BE PLACED ON FROZEN GROUND. THIS WILL LIKELY REQUIRE REMOVAL OF A FROZEN SOIL CRUST AT THE COMMENCEMENT OF EACH DAY'S OPERATION. THE FINAL SUBGRADE ELEVATION WOULD ALSO REQUIRE AN APPROPRIATE DEGREE OF INSULATION AGAINST FREEZING.

24.) PLACEMENT OF BORROW MATERIALS SHALL BE PERFORMED IN A MANNER THAT PREVENTS LONG TERM DIFFERENTIAL SETTLEMENT. EXCESSIVELY WET MATERIALS SHALL BE STOCKPILED AND ALLOWED TO DRAIN BEFORE PLACEMENT. FROZEN MATERIAL SHALL NOT BE USED FOR CONSTRUCTION. VOIDS BETWEEN STONES AND CLUMPS OF MATERIAL SHALL BE FILLED WITH FINE MATERIALS.

25.) SEE DETAILS CONCERNING SITE LAYOUT, DRAINAGE, UTILITY AND SEDIMENT AND EROSION CONTROLS.

26.) THE EXISTING DUPLEX WILL BE SERVED BY A SPRINKLER SYSTEM AS REQUIRED UNDER CHAPTER 109–30 OF THE CODE IF THE CITY OF DOVER AND THE 2015 STATE BUILDING CODES.

27.) ALL EROSION CONTROL NOTES SHALL INCLUDE PROVISIONS FOR CONSTRUCTION SEQUENCING, TEMPORARY EROSION CONTROL MEASURES, AND PERMANENT STANDARDS SUCH AS LOAM SPREAD RATE FOR DISTURBED AREAS, RATES OF LIME, TYPE AND RATES FOR FERTILIZER, AND SEED AND MULCH MIXTURE WITH RATES OF APPLICATION. FILTREXX SOXX IS PREFERRED OVER THE USE OF SILT FENCE. FENCING IS TO BE USED ON SITE ONLY AS REQ. AND DIRECTED BY THE SWPPP INSPECTOR.

28.) SITE SHALL BE ACCESSIBLE IN ALL WEATHER CONDITIONS

29.) ALL DRAINAGE PIPE IS TO BE HDPE N–12. INDIVIDUAL PIPE SIZES ARE SPECIFIED. RECYCLED PIPE IS APPROVED FOR PROJECT SITE. RECYCLED HDPE PIPE "GREEN PIPE" IS ACCEPTABLE FOR THIS PROJECT SITE.

30.) ALL ELEVATIONS TO BE VERIFIED BY THE CONTRACTOR PRIOR TO CONSTRUCTION. THE DESIGN ENGINEER IS TO BE NOTIFIED IMMEDIATELY OF ANY DISCREPANCY. TEMPORARY BENCHMARKS (T.B.M.) ARE TO BE PROVIDED BY THE DESIGN ENGINEER.

31.) NOTE THAT THE PROJECT IS NOT SUBJECT TO THE EPA NPDES PHASE II. WEEKLY INSPECTIONS WILL BE CONDUCTED BY THE DESIGN ENGINEER PER CITY OF DOVER STORMWATER REGULATIONS.

32.) UPON FINAL COMPLETION AND 85% STABILIZATION THE DRAINAGE SYSTEM IS TO BE CLEANED OF ALL DEBRIS TO INCLUDE THE PUMPING OF THE BASIN SUMPS.

33.) ALL UNPAVED AREAS ARE TO RECEIVE 4" QUALITY LOAM AND SEED

34.) ALL APPLICABLE RIGHT–OF–WAY, CONSERVATION, SLOPE, CONSTRUCTION, UTILITY, ACCESS OR OTHER EASEMENTS SHALL BE REFERENCED IN A NOTE AND SHOWN ON THE PLAN.

35.) THE LIMITS OF CONSTRUCTION DISTURBANCE AND TREE CLEARING LIMITS ARE TO BE MARKED OUT AND APPROVED BY THE CITY PRIOR TO WORK. THE LIMITS OF CONSTRUCTION THAT ARE LOCATED WITHIN 50 FT. OF CONSERVATION DISTRICTS SHALL BE STAKED, FLAGGED AND CLEARLY INDENTIFIED BEFORE ANY EARTH DISTURBING ACTIVITY.

36.) ALL TREATMENT SWALE TO BE CONSTRUCTED SHALL HAVE SOD BOTTOMS UNLESS OTHERWISE INSTRUCTED BY THE DESIGN ENGINEER DURING CONSTRUCTION.

38.) A PRE–CONSTRUCTION CONFERENCE WITH THE DEVELOPER, THE DESIGN ENGINEER, THE EARTHWORK CONTRACTOR AND THE CITY ENGINEER SHALL OCCUR PRIOR TO ANY EARTH DISTURBING ACTIVITY.

39.) BUILDING ADDRESSES SHALL BE DETERMINED BY THE BUILDING OFFICIAL AT THE TIME OF ISSUANCE OF A BUILDING PERMIT.

40.) THE FOLLOWING FEDERAL AND STATE PERMITS HAVE BEEN ISSUED FOR THE SUBJECT PROPERTY:
1. NHDES SEWER DISCHARGE PERMIT (PENDING)

41.) LIST ANY VARIANCES OR SPECIAL EXCEPTIONS GRANTED BY THE ZONING BOARD OF ADJUSTMENT. NONE

42.) THIS PLAN PROPOSES 35,600 ± SQ. FT. OF DISTURBANCE.

43.) CALL DIG SAFE PRIOR TO BEGINNING WORK (1–888–344–7233)

44.) WRITTEN DIMENSION ON THIS PLAN TAKE PRECEDENCE OVER SCALED DIMENSIONS. THE CONTRACTOR SHALL USE CAUTION WHEN SCALING REPRODUCED PLANS. IN THE EVENT OF A CONFLICT BETWEEN THIS PLAN SET AND ANY OTHER DRAWINGS AND/OR SPECIFICATIONS, THE ENGINEER SHALL BE NOTIFIED BY THE CONTRACTOR PRIOR TO CONSTRUCTION. CONTRACTOR IS TO CONFIRM ALL ELEVATIONS. CONFLICTS WILL BE REPORTED TO THE DESIGN ENGINEER PRIOR TO CONSTRUCTION.

45.) SNOW STORAGE WILL BE ALONG THE EDGE OF THE ROADWAY WITHIN THE RIGHT OF WAY FOR EACH INDIVIDUAL UNIT. PRIOR TO THE SIGNING OF THE PLAN THE HOME OWNERS DOCUMENTS NEED TO BE WRITTEN AND INCLUDE A PROVISION ALLOWING FOR THIS TO TAKE PLACE. IN ADDITION SNOW WILL BE STORED AT THE END OF THE ROAD AND OFF THE TURN AROUND.

46.) THE DEVELOPMENT PROPOSES PRIVATE TRASH AND RECYCLING PICKUP. TRASH AND RECYCLING IS NOT TO BE PLACED AT THE END OF THE ROADWAY WHERE IT MEETS 6TH STREET

47.) SITE CONSTRUCTION HOURS SHALL BE LIMITED TO MONDAY–FRIDAY 7AM–6PM, SATURDAY 9AM–4PM. HOURS OF CONSTRUCTION MUST BE DOCUMENTED ON A SITE CONSTRUCTION SIGN ALONG WITH THE CONTACT INFORMATION FOR THE GENERAL CONTRACTOR. SAID SIGNAGE MUST BE LOCATED AND APPROVED BY THE CITY ENGINEER OR THE ASSISTANT CITY MANAGER.

48.) PROPOSED IMPERVIOUS COVERAGE: 15,190 Sq. Ft. ± (0.35 Ac.)
PROPOSED BUILDING COVERAGE: 2,890 Sq. Ft. ± (0.07 Ac.)

49.) BASED ON THE TRANSFER OF DEVELOPMENT RIGHTS (TDR), THERE ARE 4.5 UNITS. 1.5 UNITS WILL BE PURCHASED FROM TDR. 6 TOTAL UNITS ARE PROPOSED

50.) SUBJECT PARCEL IS NOT LOCATED WITHIN A FEDERALLY DESIGNATED FLOOD HAZARD AREA.

51.) A SECURITY SYSTEM WILL BE INSTALLED AS REQUIRED BY CHAPTER 58, ARTICLE I, SECTION 58–2 OF THE CODE OF THE CITY OF DOVER (IF A BUSINESS ESTABLISHMENT OR A MULTI–FAMILY DWELLING CONTAINED IN A NEW, ALTERED OR REPAIRED STRUCTURE).

52.) COMMERCIAL VEHICLE ROUTE DURING CONSTRUCTION SHALL CONFORM WITH THE DOVER CITY CODE OR BE COORDINATED WITH THE COMMUNITY SERVICES DIRECTOR.

53.) TOPOGRAPHY DEPICTED IS BASED ON U.S.G.S. NVD 1929 AND WERE OBTAINED USING A SURVEY GRADE GPS UNIT.

54.) BASIS OF BEARING WERE SURVEY GRADE GPS UNITS, WHICH WERE USED TO DETERMINE LOCATION, ORIENTATION AND VERTICAL DATUM.

55.) A LIST OF PLAN REFERENCES CAN BE FOUND ON THE EXISTING CONDITIONS PLAN.

DOVER FILE #P18–07

| REVISION | DATE | DESCRIPTION |
|---|---|---|
| #1 | 4–16–18 | REVISED PER TRC COMMENTS OF 4–5–18 |

SUBDIVISION SITE PLAN
RESIDENTIAL SUBDIVISION REVIEW
LAND OF
TDAK & COMPANY LLC
99 SIXTH STREET
DOVER, N.H.
*TAX MAP 35, LOT 57*

BERRY SURVEYING & ENGINEERING
335 SECOND CROWN POINT ROAD
BARRINGTON, NH 03825 (603)332–2863

SCALE : 1 IN. EQUALS 20 FT.
DATE : MARCH 28, 2018
FILE NO. : DB 2017–060

STATE OF NEW HAMPSHIRE
KENNETH A. BERRY
No. 14043
LICENSED
PROFESSIONAL ENGINEER

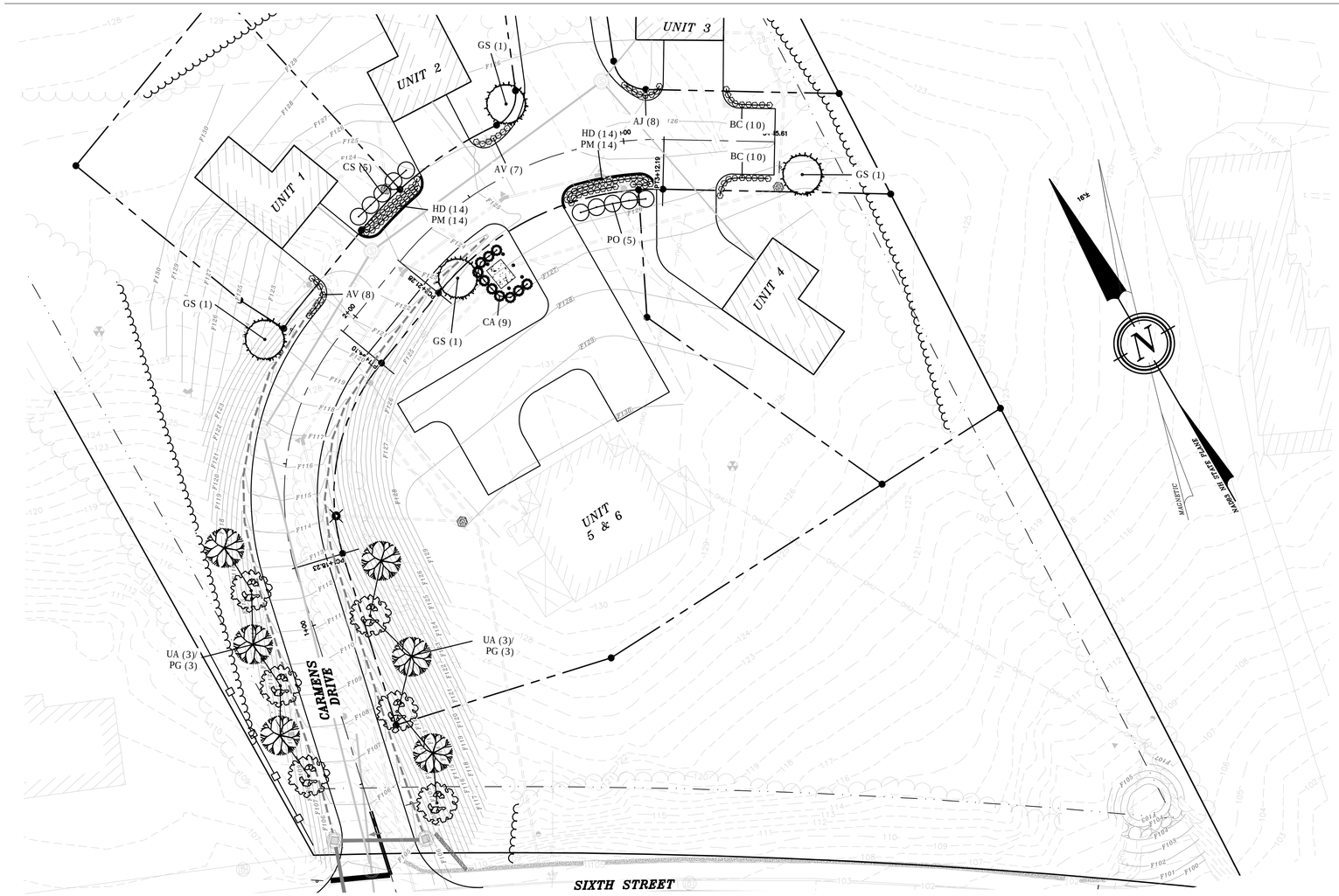


*NOTES:*

1. CALL DIG SAFE PRIOR TO BEGINNING WORK. (1-888-344-7233). THE LANDSCAPE CONTRACTOR IS ADVISED OF THE PRESENCE OF UNDERGROUND UTILITIES AND SHALL VERIFY THE EXISTENCE AND LOCATION OF THE SAME BEFORE COMMENCING AND DIGGING OPERATIONS. THE LANDSCAPE CONTRACTOR SHALL REPLACE OR REPAIR UTILITIES, PAVING, WALKS, CURBING, ETC DAMAGED IN PERFORMANCE OF THIS JOB AT NO ADDITIONAL COST TO THE OWNER OR GENERAL CONTRACTOR.
2. CONTRACTOR SHALL THOROUGHLY FAMILIARIZE THEMSELVES WITH ALL SITE CONDITIONS PRIOR TO CONSTRUCTION BIDDING.
3. THE CONTRACTOR SHALL SUPPLY ALL PLANT MATERIALS IN QUANTITIES SUFFICIENT TO COMPLETE THE PLANTINGS SHOWN ON THE DRAWINGS. VARIATIONS IN QUANTITIES ARE TO BE APPROVED BY THE DESIGN ENGINEER.
4. PROVIDED SMOOTH TRANSITION WHERE NEW WORK MEETS EXISTING CONDITIONS.
5. ALL PLANT MATERIAL INSTALLED SHALL MEET THE SPECIFICATIONS OF "AMERICAN STANDARD FOR NURSERY STOCK" BY THE AMERICAN ASSOCIATION OF NURSERYMEN
6. ALL PLANT MATERIALS SHALL BE FREE FROM INSECTS AND DISEASE.
7. ALL PLANTINGS SHALL BE DONE IN ACCORDANCE WITH ACCEPTABLE HORTICULTURAL PRACTICES. THIS IS TO INCLUDE PROPER PLANTING MIX, PLANT BED AND TREE PIT PREPARATION, PRUNING STAKING OR GUYING, WRAPPING, SPRAYING, FERTILIZATION, PLANTING AND ADEQUATE MAINTENANCE UNTIL ACCEPTANCE FROM OWNER.
8. ALL GRASS, OTHER VEGETATION AND DEBRIS SHALL BE REMOVED FROM ALL PLANTING AREAS PRIOR TO PLANTING.
9. THE GENERAL CONTRACTOR SHALL BE RESPONSIBLE FOR THE PROTECTION OF EXISTING AND NEWLY PLANTED TREES AND SHRUBS DURING THE CONSTRUCTION PROCESS. WHERE REQUIRED, THE CONTRACTOR SHALL INSTALL TEMPORARY FENCING (SNOW OR EQUAL) AROUND EXISTING TREES AND SHRUBS THAT COULD BE IMPACTED BY THE CONSTRUCTION PROCESS. STORAGE OF CONSTRUCTION EQUIPMENT, CONSTRUCTION MATERIALS, SNOW STORAGE AND OR VEHICLE PARKING SHALL NOT BE PERMITTED WITHIN THE DRIP LINE OF TREES OR TWENTY FEET WHICH EVER IS GREATER.
10. NEW PLANTINGS SHALL BE INSTALLED PER PROJECT DRAWINGS AND SPECIFICATION THAT INCLUDE FERTILIZATION AND MULCHING AS REQUIRED.
11. ALL SHRUB BEDS AND TREE PITS SHALL BE MULCHED WITH 3" CLEAN SHREDDED BLACK MULCH
12. WHERE INDICATED ON PLAN, PLANTING SOIL MIXTURE FOR GROUND COVER AND PERENNIAL BED AREAS SHALL CONSIST OF FOUR PARTS TOPSOIL, TWO PARTS SPHAGNUM PEAT MOSS, AND ONE PART HORTICULTURAL PERLITE BY VOLUME. PEAT MOSS MAY BE SUBSTITUTED WITH WELL-ROTTED OR DEHYDRATED MANURE OR COMPOST. ROTOTILL BEDS TO A DEPTH OF 8 INCHES.
13. MAINTENANCE OF NEW PLANTINGS AND LAWNS SHALL BE THE RESPONSIBILITY OF THE GENERAL CONTRACTOR AND OR LANDSCAPE SUBCONTRACTOR UNTIL ACCEPTANCE BY THE OWNER. RESPONSIBILITIES SHALL INCLUDE WATERING WEEDING AND MOWING AS NECESSARY. ALL PLANT MATERIAL SHALL BE GUARANTEED FOR A PERIOD OF ONE YEAR FROM THE DATE OF ACCEPTANCE, REPLACEMENT MATERIAL SHALL BE GUARANTEED FOR AND ADDITIONAL YEAR FROM TIME OF INSTALLATION.
14. THE GENERAL CONTRACTOR SHALL BE RESPONSIBLE FOR MAINTAINING ALL TEMPORARY EROSION CONTROL MEASURES DURING THE CONSTRUCTION PHASE AND UNTIL ALL AREAS HAVE BEEN STABILIZED AND ACCEPTED BY THE OWNER. THE GENERAL CONTRACTOR SHALL PROVIDE WEEKLY INSPECTIONS OF EROSION MEASURE AND IMMEDIATELY AFTER STORM EVENTS AND REPAIR AS NECESSARY.
15. THE GENERAL CONTRACTOR AND OR THE LANDSCAPE SUBCONTRACTOR SHALL BE RESPONSIBLE FOR THE REMOVAL OF ALL THREE GUYING MATERIAL ONCE PLANT MATERIAL HAS BEEN ESTABLISHED. (MINIMUM OF ONE GROWING SEASON). ALL TEMPORARY EROSION CONTROL MEASURE SHALL BE REMOVED ONCE STABILIZATION OF DISTURBANCE HAS BEEN ACCEPTED BY OWNER.
16. THE GENERAL CONTRACTOR SHALL BE RESPONSIBLE FOR A MINIMUM OF TWO MOWINGS FOR ALL TURF AREAS OR UNTIL ACCEPTANCE BY THE OWNER. A MINIMUM UNIFORM 75% CATCH OF TURF IS REQUIRED FOR ACCEPTANCE.
17. ALL PLANTINGS SHALL BE WATERED REGULARLY DURING THEIR FIRST YEAR AND MAINTAINED PERMANENTLY IN GOOD GROWING CONDITION AS AN EFFECTIVE VISUAL SCREEN.
18. SHRUBS OR TREES WHICH DIE SHALL BE REPLACED WITHIN ONE GROWING SEASON WITH NEW SHRUBS OR TREES TO ENSURE CONTINUED COMPLIANCE WITH APPLICABLE LANDSCAPING REQUIREMENTS.
19. ALL REQUIRED LANDSCAPING SHALL BE INSTALLED BEFORE OCCUPANCY, OR WITHIN SIX MONTHS IF OCCUPANCY OCCURS DURING WINTER CONDITIONS.
20. TREES ARE TO BE 6' TALL AT PLANTING.
21. ALL PLANT STOCK SHALL CONFORM TO ANSI Z260.1 – NURSERY STOCK, LATEST EDITIONS (AMERICAN ASSOCIATION OF NURSERYMEN, INC.)
22. 4" AGED PINEBARK MULCH AND A WEED BARRIER (TY-PAR FABRIC OR APPROVED EQUAL) SHALL BE APPLIED TO ALL SHRUB AND GROUND COVER BEDS. INSTALL WEED BARRIER AS PER MANUFACTURERS RECOMMENDATIONS.
23. PLANT-PIT BACK-FILL SHALL BE MIXED AT A RATE OF 7 PARTS OF TOPSOIL TO 2 PARTS OF DEHYDRATED COW MANURE. SLOW RELEASE FERTILIZER SHALL BE APPLIED AS PER MANUFACTURERS RECOMMENDATIONS. USE EXISTING ON-SITE TOPSOIL AS PART OF BACK FILL WHEN AVAILABLE.
24. ALL LANDSCAPED AREAS NOT PLANTED WITH TREES, SHRUBS OR GROUNDCOVER SHALL BE RESTORED WITH SEED OR SOD AS INDICATED ON PLANS.
25. TOPSOIL WILL BE TESTED FOR FERTILIZATION REQUIREMENTS, AND SLOW RELEASE ENVIRONMENTALLY FRIENDLY FERTILIZER WILL BE APPLIED AT THE RECOMMENDED RATES.
26. ALL DISTURBED WETLAND BUFFER AREAS, EXCEPT FOR AREAS THAT ARE PART OF THE DRAINAGE SYSTEM, ARE TO BE RESEEDED WITH A CONSERVATION SEED MIX AND ONLY MOWED TWICE PER YEAR.
27. ALL PLANT SUBSTITUTIONS MUST BE APPROVED BY THE ENGINEER.
28. PLANTS SHALL BE SUBJECT TO INSPECTION AND APPROVAL AT THE PLACE OF GROWTH, UPON DELIVERY OR AT THE JOB SITE WHILE WORK IS ONGOING TO CONFORMITY TO SPECIFIED QUALITY, SIZE AND VARIETY.
29. PLANTS FURNISHED IN CONTAINERS SHALL HAVE THE ROOTS WELL ESTABLISHED IN THE SOIL MASS AND SHALL HAVE AT LEAST ONE (1) GROWING SEASON. ROOT-BOUND PLANTS OR INADEQUATELY SIZED CONTAINERS TO SUPPORT THE PLANT MAY BE DEEMED UNACCEPTABLE.
30. ALL PLANTS SHALL BE GUARANTEED BY THE CONTRACTOR FOR NO LESS THAN ONE FULL YEAR FROM THE TIME OF INSTALLATION. DURING THIS TIME, THE OWNER SHALL MAINTAIN ALL PLANT MATERIALS IN THE ABOVE MANNER. IT IS THE CONTRACTOR'S RESPONSIBILITY TO INSPECT THE PLANTS TO ENSURE PROPER CARE. IF THE CONTRACTOR IS DISSATISFIED WITH THE CARE GIVEN, HE SHALL IMMEDIATELY, AND IN SUFFICIENT TIME TO PERMIT THE CONDITION TO BE RECTIFIED, NOTIFY THE OWNER IN WRITING OR OTHERWISE FORFEIT HIS CLAIM.
31. BY THE END OF THE GUARANTEE PERIOD, THE CONTRACTOR SHALL HAVE REPLACED ANY PLANT MATERIAL THAT IS MISSING, NOT TRUE TO SIZE AS SPECIFIED, THAT HAS DIED, THAT HAS LOST NATURAL SHAPE DUE TO DEAD BRANCHES, EXCESS PRUNING OR INADEQUATE OR IMPROPER CARE, OR IS, IN THE OPINION OF THE OWNER, IN UNHEALTHY OR UNSIGHTLY CONDITION.
32. THE CONTRACTOR IS TO USE TEMPORARY MEASURES FOR WATERING PLANTS DURING THE ESTABLISHMENT PERIOD. INCLUDING CONNECTING TEMPORARY HOSES TO THE STRUCTURE WATER SUPPLY LINE AND UTILIZING SPRINKLERS UNTIL 85% GROWTH OCCURS.

PLANTING NOTES

1. CONTRACTOR SHALL OBTAIN APPROVAL FROM L.A. PRIOR TO PURCHASING &/OR INSTALLING SUBSTITUTE PLANT MATERIAL PRIOR TO PURCHASE OF ANY SUBSTITUTE MATERIALS.

2. CONSTRUCTION ACCESS WILL BE AS DIRECTED BY L.A. CONTRACTOR IS RESPONSIBLE FOR RESTORATION OF ACCESS ROUTE AND ALL AREAS DISTURBED BY PLANTING OPERATIONS UPON COMPLETION OF CONSTRUCTION OPERATIONS, AT NO ADDITIONAL COST TO THE OWNER.

3. LAYOUT OF ALL PLANTING BEDS AND LOCATION OF PLANTS TO BE APPROVED BY L.A. ON SITE PRIOR TO CONSTRUCTION AND INSTALLATION.

4. CONTRACTOR TO REMOVE ALL DEBRIS GENERATED BY PLANT INSTALLATION. DEBRIS TO BE DISPOSED OF IN A LEGAL MANNER.

5. ALL PLANT MATERIAL SHALL BE GUARANTEED TO BE IN GOOD, HEALTHY & FLOURISHING CONDITION FOR ONE YEAR FROM THE DATE OF FINAL INSTALLATION APPROVAL BY L.A. CONTRACTOR SHALL REPLACE, WITHOUT COST TO OWNER, AND AS SOON AS WEATHER CONDITIONS PERMIT, ALL DEAD AND NON-FLOURISHING PLANTS AS DETERMINED BY THE L.A. REPLACEMENT PLANTS SHALL BE BE GUARANTEED IDENTICALLY TO ORIGINAL PLANTS, TIME PERIOD COMMENCING FROM DATE OF REPLACEMENT PLANTING APPROVAL BY L.A.

6. ALL BEDS TO BE MULCHED WITH 3" DEPTH SHREDDED BARK MULCH UNLESS NOTED OTHERWISE.

7. CONTRACTOR TO PROVIDE NECESSARY TEMPORARY IRRIGATION IF NEEDED BASED ON TIME OF YEAR THE PROJECT IS IMPLEMENTED.

8. ALL PLANT MATERIAL TO COMPLY WITH THE CITY OF DOVER'S SITE REVIEW REGULATIONS, 149-14(G), SUCH THAT THERE SHALL BE DECIDUOUS SHADE TREES PLANTED 40 FEET O.C. ALONG THE PERIMTERE OF THE PARKING LOTS AND SHRUBS PLANTED 5 FEET O.C. WITHIN THE PERIMETER BUFFER. SEE PLANT LIST FOR SPECIES AND SIZE OF PLANTS.

TEMPORARY WATERING NOTES

1. CONTRACTOR IS RESPONSIBLE FOR MAKING SURE ALL PLANT MATERIAL HAS ADEQUATE WATER DURING THE ESTABLISHMENT PERIOD.

2. THE USE OF GATOR BAGS, SOAKER HOSE, HAND WATERING AND OTHER TECHNIQUES SHOULD BE USED TO ASSURE PROPER HYDRATION OF THE PLANTINGS IS MAINTAINED.

3. TEMPORARY IRRIGATION SYSTEMS CAN BE SET UP TO ASSIST IN WATERING ACTIVITIES.

**PLANTING SCHEDULE**
**Carmens Way**
**Botanical Name/ Common Name**

| | Size | Qty | Label |
|---|---|---|---|
| **Trees** | | | |
| *Gleditsia* 'Shademaster' / Shademaster Honeylocust | 3" Cal. | 4 | GS |
| *Ulmus americana* 'Princeton' / Princeton American Elm | 3" Cal. | 6 | UA |
| Picea Glauca / White Spruce | 3" Cal. | 6 | PG |
| **Shrubs** | | | |
| *Cornus sanguina* 'Winter Flame' / Winter Flame Dogwood | 2-3' B&B | 5 | CS |
| *Physocarpus opulifolius* 'Summer Wine' / Summer Wine Ninebark | 2-3' B&B | 5 | PO |
| **GRASSES** | | | |
| *Calamagrostis x acutiflora* 'Karl Forester' / Karl Foester's Feather Reed Grass | #2 | 9 | CA |
| **Perennials** | | | |
| *Hosta* 'Blue Cadet' / *Blue Cadet Hosta* | #1 | 20 | BC |
| *Astilbe* 'Visions in Pink' / Visions in Pink Astilbe | #1 | 15 | AV |
| *Hemerocallis* 'Big Time Happy' / Big Time Happy Daylily | #1 | 28 | HD |
| *Hemerocallis* 'Pardon Me' / Pardon Me Daylily | #1 | 28 | PM |
| *Sedum* 'Autumn Joy' / Autumn Joy Sedum | #1 | 8 | AJ |

terrain
planning & design llc

**General Plant Maintenance Guide**

**General Plant Bed Maintenance:**

- All plant maintenance should be performed by a qualified horticulturalist or licensed arborist. Cleaning the dead material out of the planting bed in the fall helps keep litter from building up around the plants and in some cases killing the plants. Watering the first year during dry periods will help get the plants established. Mulching every year is not necessary. Raking the old mulch and turning it over is all that is needed. When necessary only install one inch of mulch and do not place the mulch closer than 3" to the trunks or stems of woody plants.

**Trees**

- The first year watering during dry periods will be necessary.
- 3" inches of mulch maybe used. The mulch should be kept 3 inches from the trunk.
- Fertilizing is not necessary for the first year. Fertilizing in subsequent years only when and if the foliage is looking weak.
- Fertilization should occur prior to Mat 31st or after trees have dropped their leaves for the year.
- Prune dead wood once a year.
- Depending on the amount of compaction the bed area receives, deep root aeration may be needed over time

**Woody Shrubs**

- The first year watering during dry periods will be necessary.
- 3" inches of mulch maybe used. The mulch should be kept 3 inches from the stems.
- Fertilizing is not necessary for the first year. Fertilizing in subsequent years only when and if the foliage is looking weak.
- Fertilization should occur prior to Mat 31st or after shrubs have dropped their leaves or gone dormant for the year.
- Prune dead wood once a year.

**Grasses**

- Grasses only need to be clipped back at the end of the growing season and all the clippings removed from the area.
- Do not over mulch. Too much mulch will prohibit the grass from developing into a strong clump.

**Perennials**

- All perennials need to be pruned back after the first or second hard frost. A two-step method: first dead head all the flower heads and let drop to the ground for re-seeding. Second cut the stems back to 3" above the ground and remove the stem and leaf litter and place in compost. Do not over mulch. Too much mulch will prohibit the growth and development
- Fertilizing perennials once in the spring with a low phosphate fertilizer will help the plants to get started in the spring.

www.terrainplanning.com 311 kast hill road hopkinton nh 03229 T:603-491-2322

0 10 20 40 60 100

terrain
planning & design llc
311 kast hill road
hopkinton, nh 03229
603. 491. 2322
terrainplanning.com

99 SIXTH STREET
CARMENS DRIVE

Site Location:
99 SIXTH STREET
DOVER, NH
Tax Map: 35, LOT 57

Prepared For:
Berry Surveying & Engineering
335 Second Crown Point Rd
Barrington, NH 03825

LANDSCAPE PLAN

DATE: 03-25-18

SCALE: 1" = 20'

PROJECT #: 1802

Drawn By: CRB

Checked By: ERB

REVISIONS: DATE:
Issued for Client Review 3-25-18

This plan is the property of Terrain Planning & Design LLC. Use or reproduction of this plan by any means without permission or purchase from Terrain Planning & Design LLC is prohibited.

L - 01

SHEET 5 OF 22

LICENSED LANDSCAPE ARCHITECT
ERIC R. BUCK
078
STATE OF NEW HAMPSHIRE

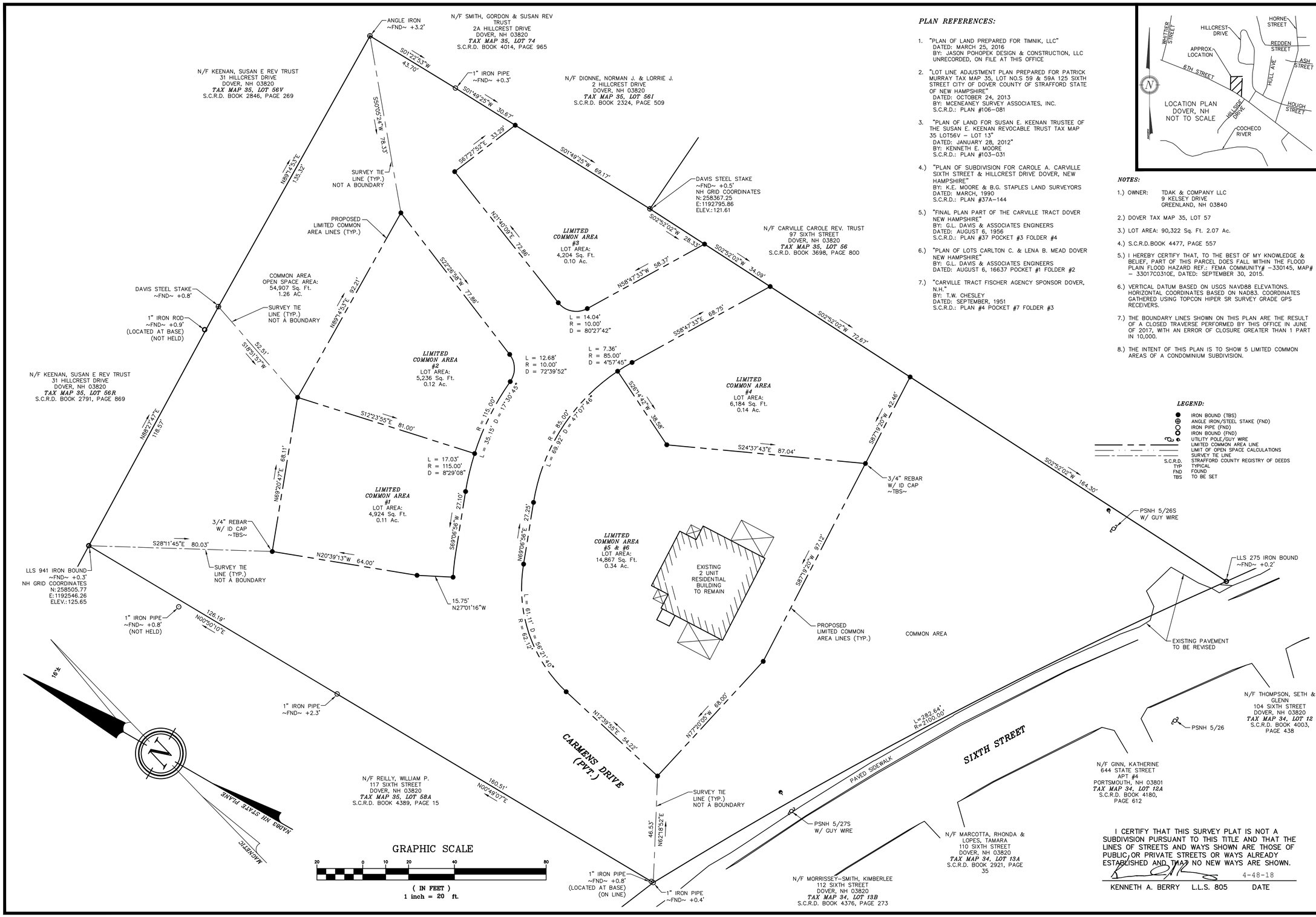


## PLAN REFERENCES:

1. "PLAN OF LAND PREPARED FOR TIMNIK, LLC"
   DATED: MARCH 25, 2016
   BY: JASON POHOPEK DESIGN & CONSTRUCTION, LLC
   UNRECORDED, ON FILE AT THIS OFFICE
2. "LOT LINE ADJUSTMENT PLAN PREPARED FOR PATRICK MURRAY TAX MAP 35, LOT NO.S 59 & 59A 125 SIXTH STREET CITY OF DOVER COUNTY OF STRAFFORD STATE OF NEW HAMPSHIRE"
   DATED: OCTOBER 24, 2013
   BY: MCENEANEY SURVEY ASSOCIATES, INC.
   S.C.R.D.: PLAN #106-081
3. "PLAN OF LAND FOR SUSAN E. KEENAN TRUSTEE OF THE SUSAN E. KEENAN REVOCABLE TRUST TAX MAP 35 LOT56V – LOT 13"
   DATED: JANUARY 28, 2012"
   BY: KENNETH E. MOORE
   S.C.R.D.: PLAN #103-031
4.) "PLAN OF SUBDIVISION FOR CAROLE A. CARVILLE SIXTH STREET & HILLCREST DRIVE DOVER, NEW HAMPSHIRE"
   BY: K.E. MOORE & B.G. STAPLES LAND SURVEYORS
   DATED: MARCH, 1990
   S.C.R.D.: PLAN #37A-144
5.) "FINAL PLAN PART OF THE CARVILLE TRACT DOVER NEW HAMPSHIRE"
   BY: G.L. DAVIS & ASSOCIATES ENGINEERS
   DATED: AUGUST 6, 1956
   S.C.R.D.: PLAN #37 POCKET #3 FOLDER #4
6.) "PLAN OF LOTS CARLTON C. & LENA B. MEAD DOVER NEW HAMPSHIRE"
   BY: G.L. DAVIS & ASSOCIATES ENGINEERS
   DATED: AUGUST 6, 16637 POCKET #1 FOLDER #2
7.) "CARVILLE TRACT FISCHER AGENCY SPONSOR DOVER, N.H."
   BY: T.W. CHESLEY
   DATED: SEPTEMBER, 1951
   S.C.R.D.: PLAN #4 POCKET #7 FOLDER #3




## NOTES:

1.) OWNER: TDAK & COMPANY LLC
9 KELSEY DRIVE
GREENLAND, NH 03840

2.) DOVER TAX MAP 35, LOT 57

3.) LOT AREA: 90,322 Sq. Ft. 2.07 Ac.

4.) S.C.R.D.BOOK 4477, PAGE 557

5.) I HEREBY CERTIFY THAT, TO THE BEST OF MY KNOWLEDGE & BELIEF, PART OF THIS PARCEL DOES FALL WITHIN THE FLOOD PLAIN FLOOD HAZARD REF.: FEMA COMMUNITY# –330145, MAP# – 33017C0310E, DATED: SEPTEMBER 30, 2015.

6.) VERTICAL DATUM BASED ON USGS NAVD88 ELEVATIONS. HORIZONTAL COORDINATES BASED ON NAD83. COORDINATES GATHERED USING TOPCON HIPER SR SURVEY GRADE GPS RECEIVERS.

7.) THE BOUNDARY LINES SHOWN ON THIS PLAN ARE THE RESULT OF A CLOSED TRAVERSE PERFORMED BY THIS OFFICE IN JUNE OF 2017, WITH AN ERROR OF CLOSURE GREATER THAN 1 PART IN 10,000.

8.) THE INTENT OF THIS PLAN IS TO SHOW 5 LIMITED COMMON AREAS OF A CONDOMINIUM SUBDIVISION.

## LEGEND:

- IRON BOUND (TBS)
- ANGLE IRON/STEEL STAKE (FND)
- IRON PIPE (FND)
- IRON BOUND (FND)
- UTILITY POLE/GUY WIRE
- LIMITED COMMON AREA LINE
- LIMIT OF OPEN SPACE CALCULATIONS
- SURVEY TIE LINE
- S.C.R.D. STRAFORD COUNTY REGISTRY OF DEEDS
- TYP TYPICAL
- FND FOUND
- TBS TO BE SET

I CERTIFY THAT THIS SURVEY PLAT IS NOT A SUBDIVISION PURSUANT TO THIS TITLE AND THAT THE LINES OF STREETS AND WAYS SHOWN ARE THOSE OF PUBLIC OR PRIVATE STREETS OR WAYS ALREADY ESTABLISHED AND THAT NO NEW WAYS ARE SHOWN.

4-48-18

KENNETH A. BERRY L.L.S. 805 DATE

DOVER FILE #P18-07

| REVISION | DATE | DESCRIPTION |
|---|---|---|
| #1 | 4-16-18 | REVISED PER TRC COMMENTS OF 4-5-18 |

CONDOMINIUM SUBDIVISION PLAN
RESIDENTIAL SUBDIVISION REVIEW
LAND OF
TDAK & COMPANY LLC
99 SIXTH STREET
DOVER, N.H.
*TAX MAP 35, LOT 57*

BERRY & SURVEYING ENGINEERING
335 SECOND CROWN POINT ROAD
BARRINGTON, NH 03825 (603)332-2863

SCALE : 1 IN. EQUALS 20 FT.
DATE : MARCH 28, 2018
FILE NO. : DB 2017-060

STATE OF NEW HAMPSHIRE — LICENSED LAND SURVEYOR — No. 805 — KENNETH A. BERRY — SIGNATURE

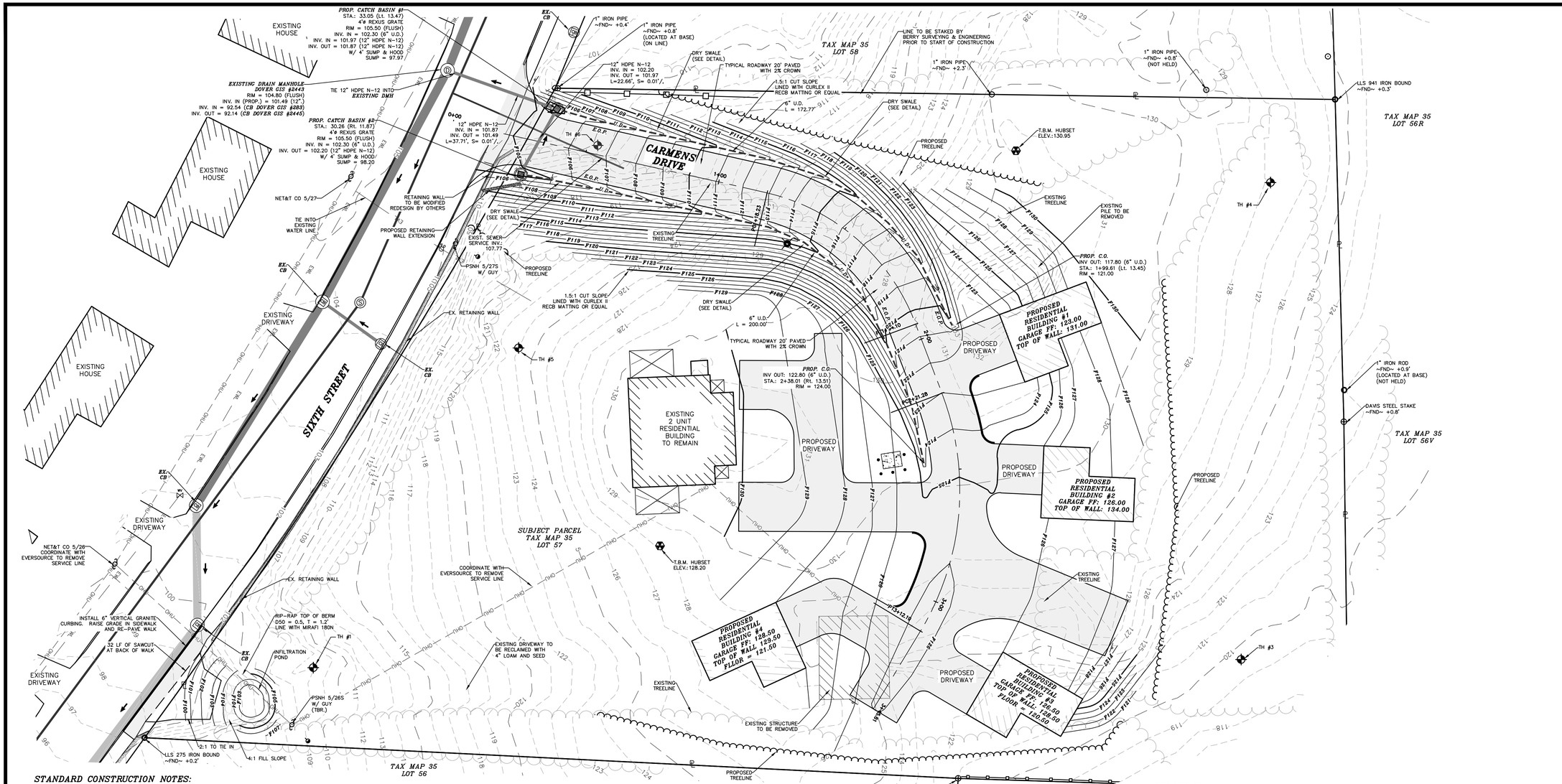


## STANDARD CONSTRUCTION NOTES:

1.) EXISTING CONDITIONS INFORMATION IS BASED ON A SURVEY PERFORMED BY BERRY SURVEYING & ENGINEERING AND IS ENCLOSED IN THIS PACKAGE.

2.) THIS PROJECT SHALL BE CONSTRUCTED IN ACCORDANCE WITH NHDOT STANDARD SPECIFICATIONS DATED 2016. CURRENT STANDARD PLANS, SUPPLEMENTAL SPECIFICATIONS AND SPECIAL PROVISIONS INCLUDED IN THE PROPOSAL.

3.) CONTRACTOR SHALL TAKE SPECIAL CARE IN NOT DISTURBING EXISTING MONUMENTS BOUNDS, AND OR BENCHMARKS WITHOUT FIRST MAKING PROVISIONS FOR RELOCATION

4.) THE LOCATIONS OF EXISTING UNDERGROUND UTILITIES ARE SHOWN IN AN APPROXIMATE WAY ONLY AND HAVE NOT BEEN INDEPENDENTLY VERIFIED BY THE OWNER OR ITS REPRESENTATIVE. THE CONTRACTOR SHALL DETERMINE THE EXACT LOCATION OF ALL EXISTING UTILITIES BEFORE COMMENCING WORK AND AGREES TO BE FULLY RESPONSIBLE FOR ANY AND ALL DAMAGES WHICH MIGHT BE OCCASIONED BY THE CONTRACTOR'S FAILURE TO LOCATE EXACTLY AND TO PRESERVE ANY AND ALL UNDERGROUND UTILITIES CALL "DIG-SAFE" 1-888-DIGSAFE (344-7233) AT LEAST 72 HOURS BEFORE COMMENCING CONSTRUCTION

5.) WHERE AN EXISTING UNDERGROUND UTILITY IS FOUND TO CONFLICT WITH THE PROPOSED WORK, THE LOCATION, ELEVATION AND SIZE OF THE UTILITY SHALL BE ACCURATELY DETERMINED WITHOUT DELAY BY THE CONTRACTOR, AND THE INFORMATION FURNISHED TO THE ENGINEER FOR RESOLUTION OF THE CONFLICT.

6.) THE CONTRACTOR SHALL MAKE ALL ARRANGEMENTS FOR THE ALTERATION AND ADJUSTMENT OF GAS, ELECTRIC, TELEPHONE AND ANY OTHER PRIVATE UTILITIES BY THE UTILITY COMPANIES.

7.) AREAS OUTSIDE THE LIMITS OF PROPOSED WORK DISTURBED BY THE CONTRACTOR'S OPERATIONS SHALL BE RESTORED BY THE CONTRACTOR TO THEIR ORIGINAL CONDITION AT THE CONTRACTOR'S EXPENSE.

8.) THE TERM "PROPOSED" (PROP.) MEANS WORK TO BE CONSTRUCTED USING NEW MATERIALS, OR, WHERE APPLICABLE, RE-USING EXISTING MATERIALS IDENTIFIED AS "REMOVE & RESET" (R & R)

9.) ALL SYMBOLS, WORDS, TRANSVERSE MARKINGS (STOP BARS, CROSSWALK LINES, AND RAILROAD SYMBOLS), LANE LINES, AND ALL OTHER MARKINGS NOTED WITH ‡T‡ SHALL BE THERMOPLASTIC

10.) ALL DISTURBED AREAS NOT DESIGNATED TO BE PAVED SHALL HAVE LOAM PLACED AND SEEDED. THE LOAM SHALL HAVE A MINIMUM DEPTH OF 4 INCHES AND SHALL BE PLACED FLUSH WITH THE TOP OF THE ADJACENT CURB, EDGING, BERM OR PAVEMENT SURFACE.

## STANDARD CONSTRUCTION NOTES CONT:

11.) COMMERCIAL VEHICLE ROUTE DURING CONSTRUCTION SHALL CONFORM WITH CITY OF DOVER CODE OR BE COORDINATED WITH THE COMMUNITY SERVICES DIRECTOR.

12.) ALL CATCH BASINS SHALL BE PRE-CAST H-20 LOADING AND SHALL BE EQUIPPED WITH DEEP SUMPS (4' MIN.) AND HOODS (SEE DETAILS) HOODS ARE TO BE "THE ELIMINATOR" BY KLEANSTREAM. RIMS ARE TO BE REXUS STYLE AND SHALL BE SET FLUSH WITH FINISH GRADE, UNLESS OTHERWISE INSTRUCTED DURING CONSTRUCTION BY DOVER DPW. RIMS ABOVE FINISH GRADE WILL BE NOT BE ACCEPTED. ALL RIMS, GRATES AND COVERS ARE TO BE U.S.A MADE.

## NOTES:

1.) THE INTENT OF THIS PLAN SET IS TO SHOW THE OVERVIEW OF THE SITE GRADING AT 99 SIXTH STREET.

2.) CURRENT OWNER: TDAK & COMPANY LLC
9 KELSEY DRIVE
GREENLAND, NH 03840

3.) APPLICANT: TDAK & COMPANY LLC
9 KELSEY DRIVE
GREENLAND, NH 03840

4.) TAX MAP 35, LOT 57 OF THE CITY OF DOVER TAX ASSESSOR'S MAPS.

MAGNETIC
NAD83 NH STATE PLANE
N

GRAPHIC SCALE

20 0 10 20 40 80

( IN FEET )
1 inch = 20 ft.

DOVER FILE #P18-07

| REVISION | DATE | DESCRIPTION |
|---|---|---|
| #1 | 4-16-18 | REVISED PER TRC COMMENTS OF 4-5-18 |

GRADING AND DRAINAGE PLAN
RESIDENTIAL SUBDIVISION REVIEW
LAND OF
TDAK & COMPANY LLC
99 SIXTH STREET
DOVER, N.H.
*TAX MAP 36, LOT 57*

BERRY & SURVEYING ENGINEERING
335 SECOND CROWN POINT ROAD
BARRINGTON, NH 03825 (603)332-2863

SCALE : 1 IN. EQUALS 20 FT.
DATE : MARCH 28, 2018
FILE NO. : DB 2017-060

STATE OF NEW HAMPSHIRE
KENNETH A. BERRY
No. 7043
LICENSED
PROFESSIONAL ENGINEER

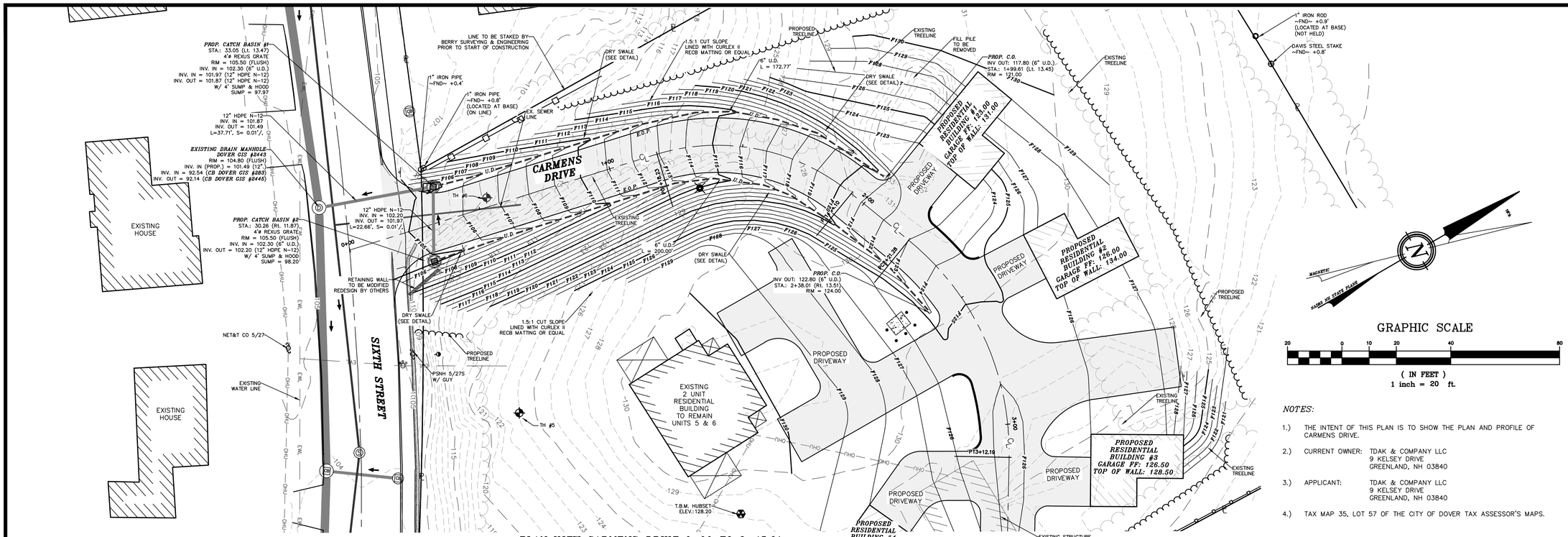


PLAN VIEW CARMENS DRIVE 0+00 TO 3+45.61

*NOTES:*

1.) THE INTENT OF THIS PLAN IS TO SHOW THE PLAN AND PROFILE OF CARMENS DRIVE.

2.) CURRENT OWNER: TDAK & COMPANY LLC
9 KELSEY DRIVE
GREENLAND, NH 03840

3.) APPLICANT: TDAK & COMPANY LLC
9 KELSEY DRIVE
GREENLAND, NH 03840

4.) TAX MAP 35, LOT 57 OF THE CITY OF DOVER TAX ASSESSOR'S MAPS.

PROFILE VIEW CARMENS DRIVE 0+00 TO 3+45.61

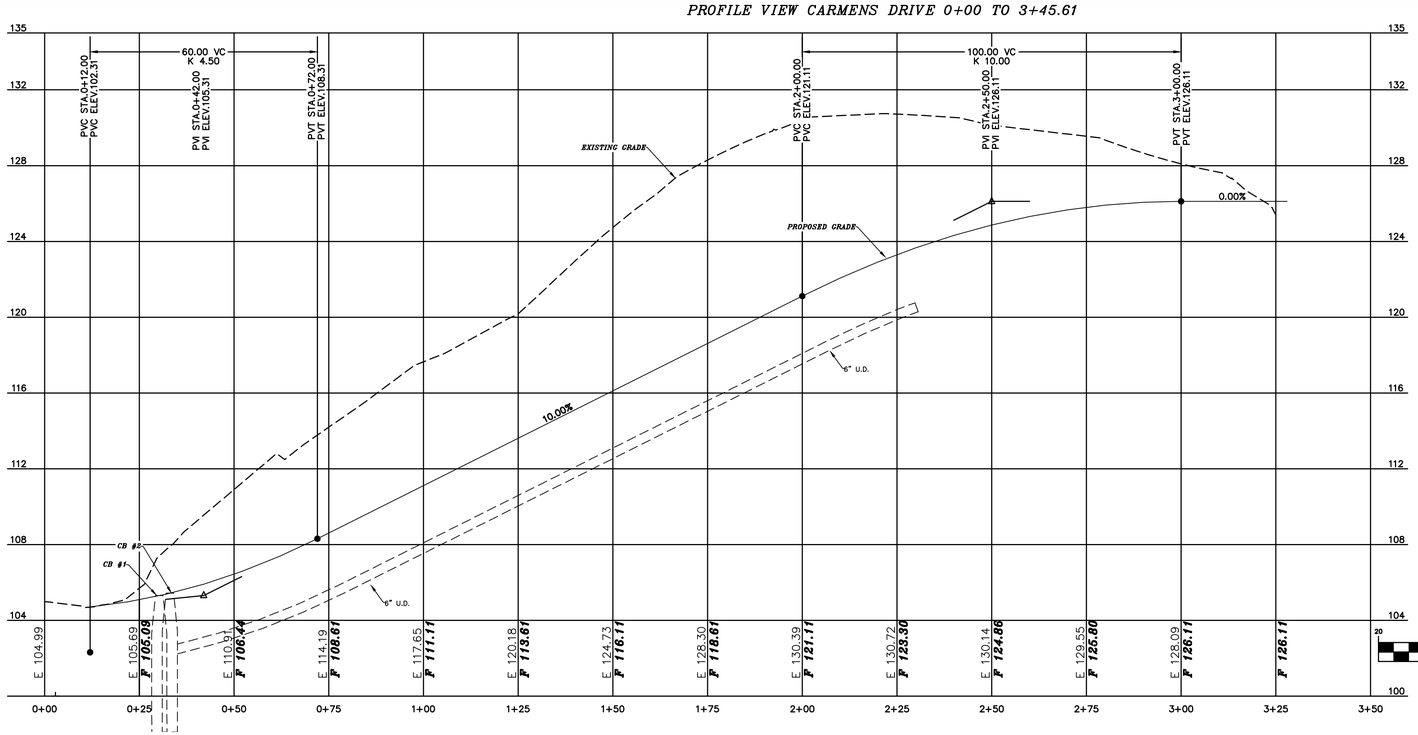


*STANDARD CONSTRUCTION NOTES CONT:*

5.) ALL ELEVATIONS TO BE VERIFIED BY THE CONTRACTOR PRIOR TO CONSTRUCTION. THE DESIGN ENGINEER IS TO BE NOTIFIED IMMEDIATELY OF ANY DISCREPANCY. TEMPORARY BENCHMARKS (T.B.M.) ARE TO BE PROVIDED BY THE DESIGN ENGINEER.

6.) NOTE THAT THE PROJECT IS NOT SUBJECT TO THE EPA NPDES PHASE II. PER THE CITY OF DOVER STORMWATER REGULATIONS, A WEEKLY INSPECTIONS WILL BE CONDUCTED BY THE DESIGN ENGINEER.

7.) UPON FINAL COMPLETION AND 85% STABILIZATION THE DRAINAGE SYSTEM IS TO BE CLEANED OF ALL DEBRIS TO INCLUDE THE PUMPING OF THE BASIN SUMPS.

8.) ALL BASINS AND DRAINS ARE TO HAVE BOOTS INSTALLED ON ALL INLETS AND OUTLETS

9.) ALL TREATMENT SWALE TO BE CONSTRUCTED SHALL HAVE SOD BOTTOMS UNLESS OTHERWISE INSTRUCTED BY THE DESIGN ENGINEER DURING CONSTRUCTION.

10.) A LETTER OF CREDIT FOR THE COST OF RE-VEGETATING ALL DISTURBED AREAS ON THE SITE SHALL BE SUBMITTED PRIOR TO ANY EARTH DISTURBING ACTIVITY OCCURS, AS MAY BE APPLICABLE.

11.) A PRE-CONSTRUCTION CONFERENCE WITH THE DEVELOPER, THE DESIGN ENGINEER, THE EARTHWORK CONTRACTOR AND DOVER CITY STAFF SHALL OCCUR PRIOR TO ANY EARTH DISTURBING ACTIVITY.

12.) BUILDING ADDRESSES SHALL BE DETERMINED BY THE BUILDING OFFICIAL.

13.) THE FOLLOWING FEDERAL AND STATE PERMITS HAVE BEEN ISSUED FOR THE SUBJECT PROPERTY:
1.) NHDES SEWER DISCHARGE PERMIT

14.) THIS RESIDENTIAL SITE PLAN PLAN PROPOSES 35,600 ± SQ. FT. OF DISTURBANCE. PER ENV-WQ 1503.12 (B) AN ALTERATION OF TERRAIN PERMIT IS NOT REQUIRED.

15.) WRITTEN DIMENSION ON THIS PLAN TAKE PRECEDENCE OVER SCALED DIMENSIONS. THE CONTRACTOR SHALL USE CAUTION WHEN SCALING REPRODUCED PLANS. IN THE EVENT OF A CONFLICT BETWEEN THIS PLAN SET AND ANY OTHER DRAWINGS AND/OR SPECIFICATIONS, THE ENGINEER SHALL BE NOTIFIED BY THE CONTRACTOR PRIOR TO CONSTRUCTION. CONTRACTOR IS TO CONFIRM ALL ELEVATIONS. CONFLICTS WILL BE REPORTED TO THE DESIGN ENGINEER PRIOR TO CONSTRUCTION.

DOVER FILE #P18-07

| REVISION | DATE | DESCRIPTION |
|---|---|---|
| #1 | 4-16-18 | REVISED PER TRC COMMENTS OF 4-5-18 |

PLAN AND PROFILE 0+00-END CARMENS DRIVE
RESIDENTIAL SUBDIVISION REVIEW
LAND OF
TDAK & COMPANY LLC
99 SIXTH STREET
DOVER, N.H.
*TAX MAP 35, LOT 57*

BERRY & SURVEYING ENGINEERING
335 SECOND CROWN POINT ROAD
BARRINGTON, NH 03825 (603)332-2863

SCALE : 1 IN. EQUALS 20 FT.
DATE : MARCH 28, 2018
FILE NO. : DB 2017-060

STATE OF NEW HAMPSHIRE
KENNETH A. BERRY
No. 14043
LICENSED
PROFESSIONAL ENGINEER

***SOILS & DEWATERING:***

*BxB* – BUXTON SILT LOAM, 3 TO 8% SLOPES — *K = 0.32 UNDISTURBED*
*SfC* – SUFFIELD SILT LOAM, 8 TO 15% SLOPES — *K = 0.37 UNDISTURBED*

***SEE SITE SPECIFIC SOILS MAP (SSSM)***
SEE WEBSOIL USDA–NRCS
ERODIBILITY FACTOR – K, OPESC MANUAL, ENVIROCERT INTERNATIONAL INC. & ROCKINGHAM COUNTTY SOIL SURVEY, ROCKWEB SOIL ATTRIBUTES.

THE SOIL ERODIBILITY FACTOR (K) OF THE SOILS ARE RELATIVELY HIGH (K=0.32.) TO (K=.37). THESE VALUES ARE BASED UPON AN UNDISTURBED ANALYSIS, DISTURBED VALUES ARE HIGHER. CONTRACTOR TO BE AWARE OF THE SOIL PROFILES AND ENSURE THAT PROPER EROSION PREVENTION AND SEDIMENT CONTROL MEASURES ARE TAKEN AT ALL TIMES. ANY DEWATERING REQUIREMENTS IN NEW HAMPSHIRE REQUIRE SPECIAL PROVISIONS IN ACCORDANCE WITH THE "CLARIFICATION OF SECTION 9.1.2 (STATE OF NEW HAMPSHIRE CONDITIONS) AND OTHER NH SPECIFIC INFORMATION FOR THE U.S. EPA 2012 NPDES CONSTRUCTION GENERAL PERMIT (CGP)" DATED MAY 3, 2012 INCLUDED IN THE SWPPP.

COVER MANAGEMENT DURING CONSTRUCTION FOR EXPOSED SOIL WILL INCLUDE HAY / STRAW APPLIED AT A RATE OF 2.0 TONS PER ACRE, TEMPORARY SEEDING OF ANNUAL RYE GRASS, AND PERMANENT SEEDING AT THE EARLIES OPPORTUNITY. SEE ADDITIONAL REQUIREMENT FOR STABILIZATION ON THE EROSION AND SEDIMENT CONTROL DETAIL SHEETS, E–101 AND E–102.

THE CONSTRUCTION SCHEDULE WILL BE MANAGED SO THAT ALL STORMWATER STRUCTURES WILL BE BUILT AND STABILIZED PRIOR TO RECEIVING SURFACE WATER RUNOFF. CONTRACTOR TO BE RESPONSIBLE FOR ALL DIVERSIONS DURING CONSTRUCTION AND FOR INTERIM SEDIMENT AND EROSION CONTROL MEASURES.

GRAPHIC SCALE
20 0 10 20 40 80
( IN FEET )
1 inch = 20 ft.

MAGNETIC
NAD83 NH STATE PLANE
15½

***NOTES:***

1.) OWNER: TDAK & COMPANY L.L.C.
99 SIXTH STREET,
DOVER, NH 03820

A.) TAX MAP 35, LOT 57

2.) THE PURPOSE OF THIS PLAN IS TO DEMONSTRATE PROPER EROSION AND SEDIMENT CONTROL DURING CONSTRUCTION PRACTICES.

3.) UNDERGROUND UTILITY LOCATIONS ARE BASED UPON BEST AVAILABLE EVIDENCE AND ARE NOT FIELD VERIFIED. LOCATING AND PROTECTING ANY ABOVE AND BELOW GROUND UTILITIES IS THE SOLE RESPONSIBILITY OF THE CONTRACTOR. ANY UTILITY CONFLICTS SHOULD BE REPORTED IMMEDIATELY TO THE DESIGN ENGINEER.

4.) THE CONTRACTOR SHALL CALL AND COORDINATE WITH DIGSAFE 1–888–344–7233 AT LEAST 72 HOURS PRIOR TO COMMENCING ANY EXCAVATION ON PUBLIC OR PRIVATE PROPERTY.

5.) SEE DETAILS CONCERNING SITE LAYOUT, DRAINAGE, UTILITY AND SEDIMENT AND EROSION CONTROLS.

6.) ALL DRAINAGE PIPE IS TO BE HDPE N–12. INDIVIDUAL PIPE SIZES ARE SPECIFIED ON GRADING AND DETAIL PLAN SHEETS.

7.) ALL ELEVATIONS TO BE VERIFIED BY THE CONTRACTOR PRIOR TO CONSTRUCTION. THE DESIGN ENGINEER IS TO BE NOTIFIED IMMEDIATELY OF ANY DISCREPANCY. TEMPORARY BENCHMARKS (T.B.M.) ARE TO BE PROVIDED BY THE DESIGN ENGINEER.

8.) UPON FINAL COMPLETION AND 85% STABILIZATION, THE DRAINAGE SYSTEM IS TO BE CLEANED OF ALL DEBRIS. SEDIMENT CONTROL PRACTICES REMOVED AND DISPOSED OF PROPERLY, AND ANNUAL MAINTENANCE PREFORMED ON ALL DRAINAGE PRACTICES.

9.) CONTRACTOR TAKE NOTE: IT IS IMPORTANT, BASED ON THE SITE SOILS, TO DIVERT FLOW AWAY FROM PROPOSED SLOPES DURING CONSTRUCTION. STABILIZE SLOPES IMMEDIATELY.

10.) MULCH BERM MAY BE USED FOR PERIMETER CONTROL & IS THE PREFERRED METHOD.

11.) CONTRACTOR TO REVIEW IN DETAIL THE PROPOSED SEQUENCE FOR THIS PROJECT.

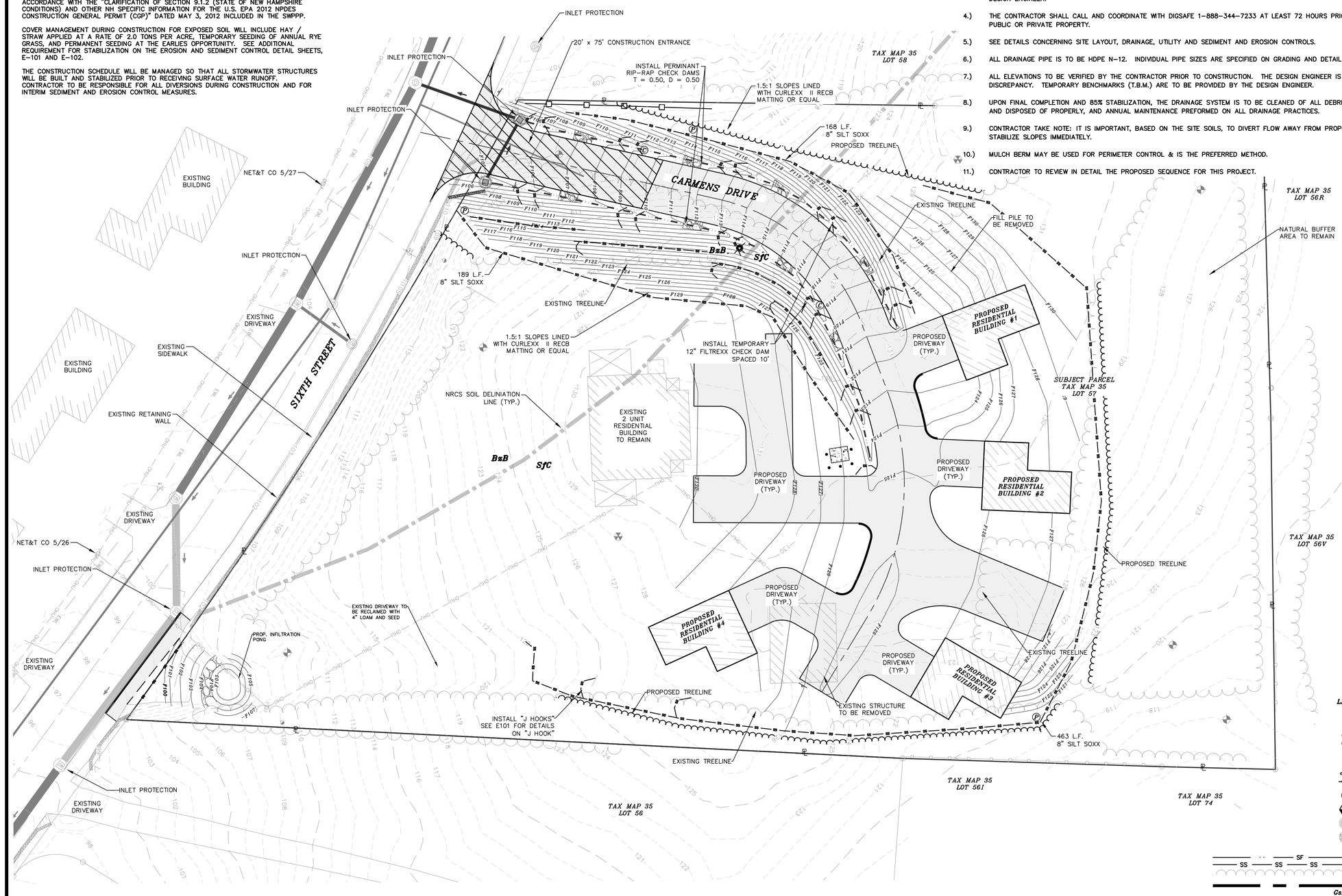


***LEGEND:***

- RAIN GARDEN BIO–MEDIA PROTECTION
- PERIMETER CONTROL
- RESIDENTIAL/ROADWAY CONSTRUCTION
- IRON PIPE (FND)
- IRON BOUND (FND)
- REBAR (FND)
- UTILITY POLE
- GUY WIRE
- WELL
- BENCHMARK
- CONIFEROUS TREE
- DECIDUOUS TREE
- SILT FENCE
- FILTREXX SILTSOXX
- TREE LINE
- NRCS SOIL DELINEATION
- GsB SOIL TYPE

| REVISION | DATE | DESCRIPTION |
|---|---|---|
| #1 | 4–16–18 | REVISED PER TRC COMMENTS OF 4–5–18 |

DOVER FILE #P18–07

EROSION AND SEDIMENT CONTROL PLAN
RESIDENTIAL SUBDIVISION REVIEW
LAND OF
TDAK & COMPANY LLC
99 SIXTH STREET
DOVER, N.H.
*TAX MAP 35, LOT 57*

BERRY SURVEYING & ENGINEERING
335 SECOND CROWN POINT ROAD
BARRINGTON, NH 03825 (603)332–2863

SCALE : 1 IN. EQUALS 20 FT.
DATE : MARCH 28, 2018
FILE NO. : DB 2017–060

STATE OF NEW HAMPSHIRE
KENNETH A. BERRY
No. 7494
LICENSED
PROFESSIONAL ENGINEER

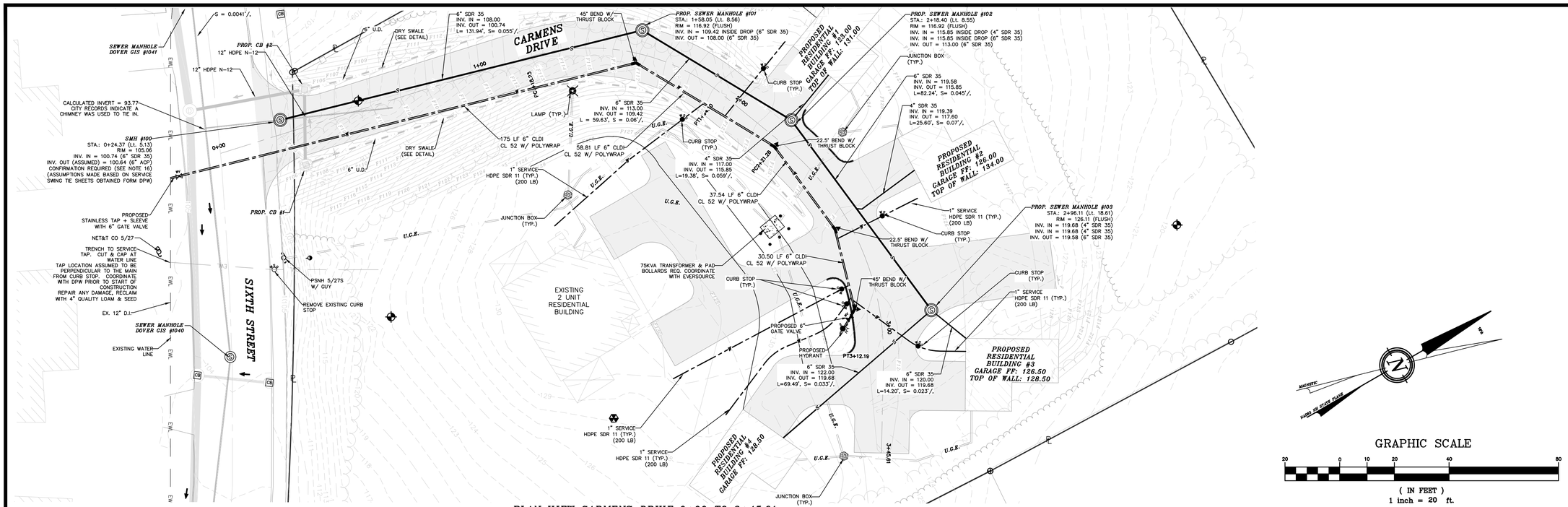


PLAN VIEW CARMENS DRIVE 0+00 TO 3+45.61

PROFILE VIEW CARMENS DRIVE 0+00 TO 3+45.61

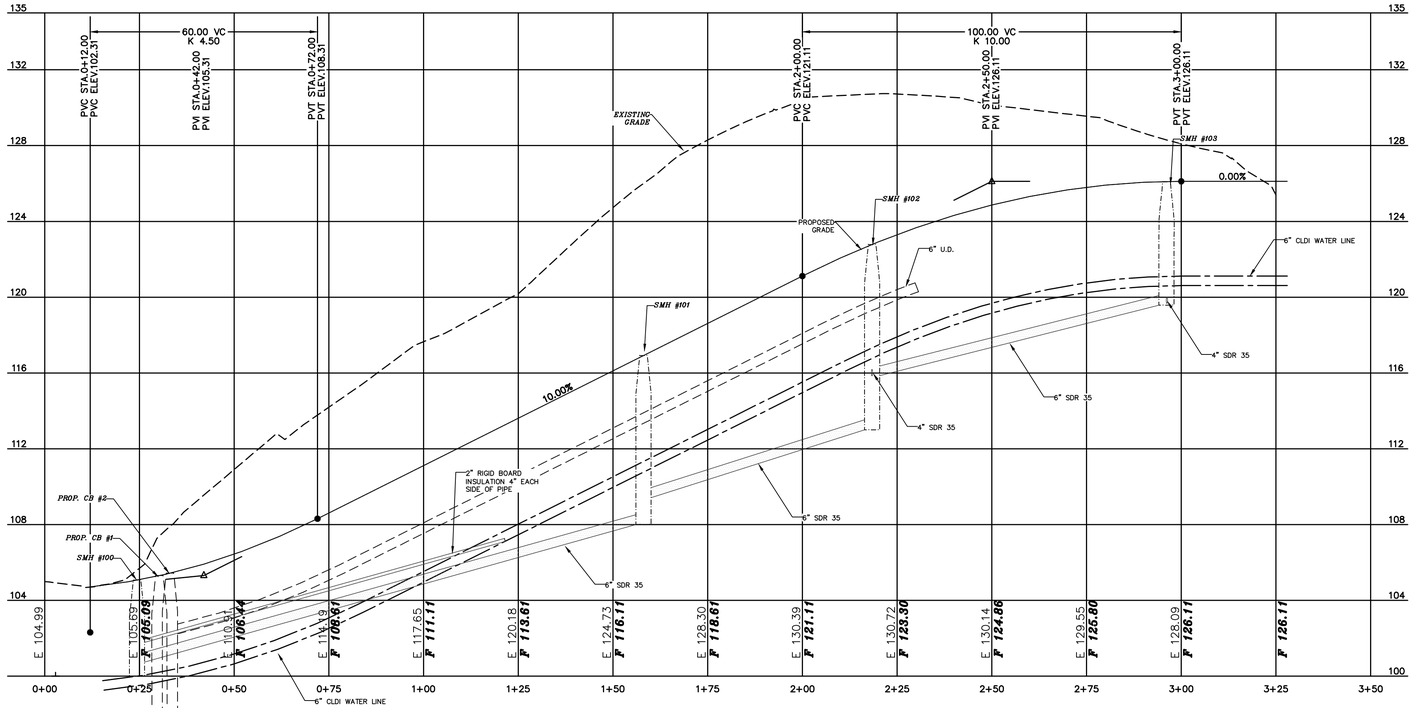


*NOTES:*

1.) THE PURPOSE OF THIS PLAN IS TO DEMONSTRATE THE OVERVIEW PRIVIATE UTILITIES WITHIN THE SITE PLAN.

2.) UNDERGROUND UTILITY LOCATIONS ARE BASED UPON BEST AVAILABLE EVIDENCE AND ARE NOT FIELD VERIFIED. LOCATING AND PROTECTING ANY ABOVE AND BELOW GROUND UTILITIES IS THE SOLE RESPONSIBILITY OF THE CONTRACTOR. ANY UTILITY CONFLICTS SHOULD BE REPORTED IMMEDIATELY TO THE DESIGN ENGINEER.

3.) THE CONTRACTOR SHALL CALL AND COORDINATE WITH DIGSAFE 1-888-344-7233 AT LEAST 72 HOURS PRIOR TO COMMENCING ANY EXCAVATION ON PUBLIC OR PRIVATE PROPERTY.

4.) PROTECTION OF SUBGRADE: THE CONTRACTOR SHALL BE REQUIRED TO MAINTAIN STABLE, DEWATERED SUBGRADES, TRENCHES, AND OTHER AREAS DURING CONSTRUCTION. SUBGRADE DISTURBANCE MAY BE INFLUENCED BY EXCAVATION METHODS, MOISTURE, PRECIPITATION, GROUNDWATER CONTROL, AND CONSTRUCTION ACTIVITIES. THE CONTRACTOR SHALL TAKE PRECAUTIONS TO PREVENT SUBGRADE DISTURBANCE. SUCH PRECAUTIONS MAY INCLUDE DIVERTING STORMWATER RUNOFF AWAY FROM CONSTRUCTION AREAS, REDUCING TRAFFIC IN SENSITIVE AREAS, AND MAINTAINING AN EFFECTIVE DEWATERING PROGRAM. SOILS EXHIBITING HEAVING OR INSTABILITY SHALL BE OVER EXCAVATED TO MORE COMPETENT BEARING SOIL AND REPLACED WITH FREE DRAINING STRUCTURAL FILL MEETING THE ENGINEERS SPECIFIC RECOMMENDED CRITERIA.

5.) IF THE EARTHWORK IS PERFORMED DURING FREEZING WEATHER (NOT ALLOWED IN CITY R.O.W.), EXPOSED SUBGRADES ARE SUSCEPTIBLE TO FROST. NO FILL OR UTILITIES SHALL BE PLACED ON FROZEN GROUND. THIS WILL LIKELY REQUIRE REMOVAL OF A FROZEN SOIL CRUST AT THE COMMENCEMENT OF EACH DAY'S OPERATION. THE FINAL SUBGRADE ELEVATION WOULD ALSO REQUIRE AN APPROPRIATE DEGREE OF INSULATION AGAINST FREEZING.

6.) PLACEMENT OF BORROW MATERIALS SHALL BE PERFORMED IN A MANNER THAT PREVENTS LONG TERM DIFFERENTIAL SETTLEMENT. EXCESSIVELY WET MATERIALS SHALL BE STOCKPILED AND ALLOWED TO DRAIN BEFORE PLACEMENT. FROZEN MATERIAL SHALL NOT BE USED FOR CONSTRUCTION. VOIDS BETWEEN STONES AND CLUMPS OF MATERIAL SHALL BE FILLED WITH FINE MATERIALS.

7.) FINAL UTILITY LOCATIONS TO BE COORDINATED BETWEEN THE CONTRACTOR, ALL APPROPRIATE UTILITY COMPANIES AND THE DOVER DPW.

8.) CONTRACTOR TO CONTACT DOVER DPW A MINIMUM OF TWO WEEKS PRIOR TO ANY CONSTRUCTION TO COORDINATE ALL WORK CONCERNING INSTALLATION OF ANY PROPOSED WATER LINE IMPROVEMENTS.

9.) ALL WATER MAIN AND SERVICE INSTALLATIONS SHALL CONFORM TO CITY OF DOVER STANDARDS. ALL HIGHWAY CONSTRUCTION WILL MEET THE CITY OF DOVER STANDARDS AS MODIFIED BY WAIVER REQUEST AT THE PLANNING BOARD.

10.) CONTRACTOR SHALL COORDINATE ALL ELECTRICAL INSTALLATIONS WITH EVERSOURCE AT (800) 662-7764. ALL ELECTRIC CONDUIT INSTALLATION SHALL BE INSPECTED BY EVERSOURCE PRIOR TO BACKFILL. A 48-HOUR MINIMUM NOTICE IS REQUIRED.

11.) ALL SEWER INSTALLATIONS SHALL CONFORM TO THE REQUIREMENTS OF NHDES & DOVER DPW SEWER DIVISION STANDARDS.

12.) CONTRACTOR SHALL COORDINATE ALL TELECOMMUNICATIONS INSTALLATIONS WITH FAIRPOINT COMMUNICATIONS AT (603) 427-5525.

13.) CONTRACTOR SHALL COORDINATE ALL CABLE INSTALLATIONS WITH METROCAST.

14.) ALL SEWER MAN HOLE RIMS & COVERS ARE TO BE PAMREX.

15.) ALL WATER SERVICES ARE TO BE WITNESSED WITH A 2"X4" PAINTED BLUE. ALL SEWER SERVICES ARE TO BE WITNESSED WITH A 2"X4" PAINTED YELLOW, IS STUBBED PRIOR TO BUILDING CONSTRUCTION.

16.) CONTRACTOR TO VERIFY LOCATION OF SEWER LINE AT THE ENTRANCE OF THE PROPOSED ROAD BEFORE ANY UTILITY WORK IS DONE TO VERIFY ITS LOCATION AND INVERT. IF PIPE APPEARS TO BE AT A DIFFERENT LOCATION, OTHER THAN WHAT IS SHOWN ON THE PLANS, CONTACT THE DESIGN ENGINEER IMMEDIATELY.

GRAPHIC SCALE

( IN FEET )
1 inch = 20 ft.
*VERTICAL SCALE: 1" = 4'*

DOVER FILE #P18-07

| REVISION | DATE | DESCRIPTION |
|---|---|---|
| #1 | 4-16-18 | REVISED PER TRC COMMENTS OF 4-5-18 |

UTILITY PLAN
RESIDENTIAL SUBDIVISION REVIEW
LAND OF
TDAK & COMPANY LLC
99 SIXTH STREET
DOVER, N.H.
*TAX MAP 35, LOT 57*

BERRY SURVEYING & ENGINEERING
335 SECOND CROWN POINT ROAD
BARRINGTON, NH 03825 (603)332-2863

SCALE : 1 IN. EQUALS 20 FT.
DATE : MARCH 28, 2018
FILE NO. : DB 2017-060

STATE OF NEW HAMPSHIRE
KENNETH A. BERRY
No. 13043
LICENSED
PROFESSIONAL ENGINEER

## CENTERLINE AND EDGELINE "CUTS" AT SIDE ROAD

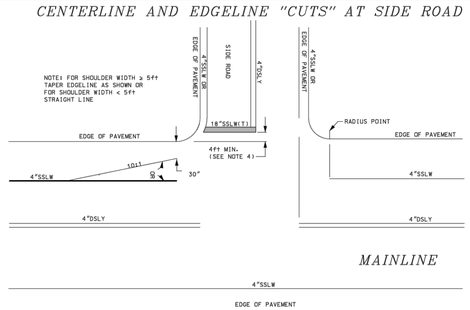


*GENERAL NOTES*

1.) EDGE LINE DETAILS ARE SHOWN FOR MAINLINE ROADWAYS WITHOUT TURN LANE. THE PRESENCE OF TURN LANES MAY REQUIRE DIFFERENT EDGELINE TREATMENTS,

2.) EDGELINES ON THE SIDE ROADS, WHEN CALLED FOR, SHALL FOLLOW THE ABOVE MAINLINE TYPICALS. EDGELINES SHALL NOT BE CONTINUOUS AROUND THE MAINLINE/SIDE ROAD RADUIS. EDGELINES SHALL END AT STOP BARS.

3.) CENTERLINE AND EDGELINE SHALL BE CONTINUOUS PAST RESIDENTIAL DRIVEWAYS. CENTERLINE AND EDGELINE SHALL BREAK FOR COMMERCIAL DRIVES W/TRAFFIC CONTROLS, MINOR SIDE ROADS, OR PRIVATE INTERSECTIONS.

4.) LOCATION OF THE STOP LINE MAY VARY DUE TO INTERSECTION SIGHT DISTANCE AND VEHICLE TURNING RADIUS AND MAY NOT ALWAYS COINCIDE WITH THE LOCATION OF THE STOP SIGN.

5.) IF THERE IS NO EDGELINE, END STOP BAR 12" FROM EDGE OF PAVEMENT.

6.) STOP BARS, WORDS, LANE LINES, SYMBOLS AND ARROWS SHALL BE THERMOPLASTIC (T).

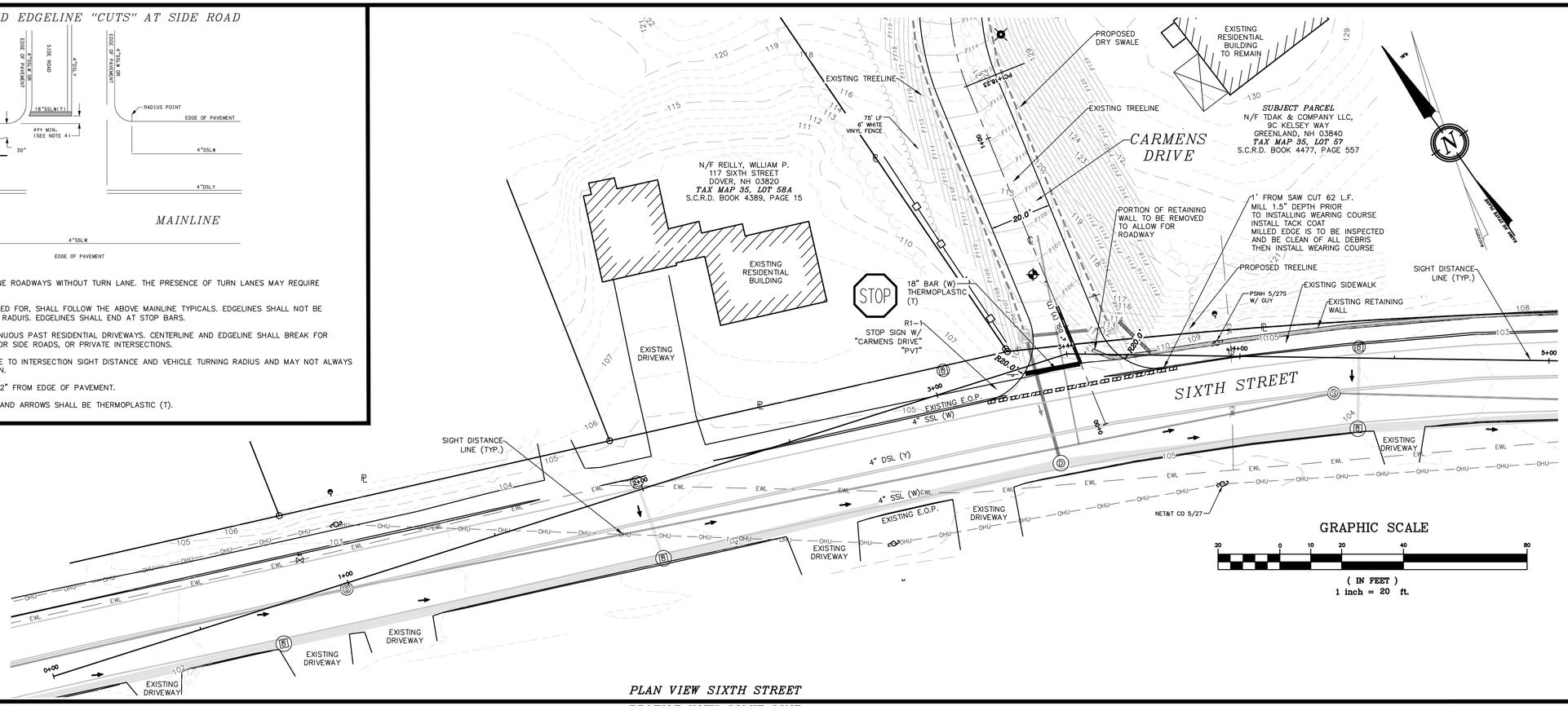


*PLAN VIEW SIXTH STREET*

*PROFILE VIEW SIGHT LINE*

GRAPHIC SCALE

( IN FEET )
1 inch = 20 ft.
*VERTICAL SCALE: 1" = 4'*

***NOTES:***

1.) OWNER: TDAK & COMPANY LLC
9 KELSEY DRIVE
GREENLAND, NH 03840

2.) DOVER TAX MAP 35, LOT 57

3.) LOT AREA: 90,322 Sq. Ft. 2.07 Ac.

4.) S.C.R.D. BOOK 4477, PAGE 557

5.) THIS IS A RESIDENTIAL DRIVEWAY.

6.) EXISTING CONDITIONS INFORMATION IS BASED ON A SURVEY PERFORMED BY BERRY SURVEYING & ENGINEERING AND IS ENCLOSED IN THIS PACKAGE.

7.) ALL PAVEMENT MARKINGS TO BE PAINTED TO NHDOT STANDARD NO. PM-9.

8.) SEE NHDOT STANDARD PLAN PM-10A FOR WORD AND SYMBOL DETAILS.

9.) THE SPEED LIMIT ON SIXTH STREET IS 30MPH.

10.) WORK WITHIN CITY OF DOVER WILL REQUIRE PROFESSIONAL FLAGGING SERVICES AND POLICE SUPERVISION.

11.) DESIGN ENGINEER TO PROVIDE INSPECTION & OVERSIGHT OF ALL WORK WITHIN R.O.W.

***LEGEND:***

- IRON BOUND (FND)
- UTILITY POLE/GUY WIRE
- OHU — OVERHEAD UTILITES
- EWL — EXISTING WATERLINE
- PROPERTY LINE
- S.C.R.D. — STRAFFORD COUNTY REGISTRY OF DEEDS
- TYP. — TYPICAL
- FND — FOUND
- S.G.C. — SLANTED GRANITE CURB
- PL — PROPERTY LINE
- E.O.P. — EDGE OF PAVEMENT
- SSL (W/Y) — SINGLE SOLD LINE (WHITE/YELLOW)
- SSB (Y) — DOUBLE SOLID LINE (YELLOW)

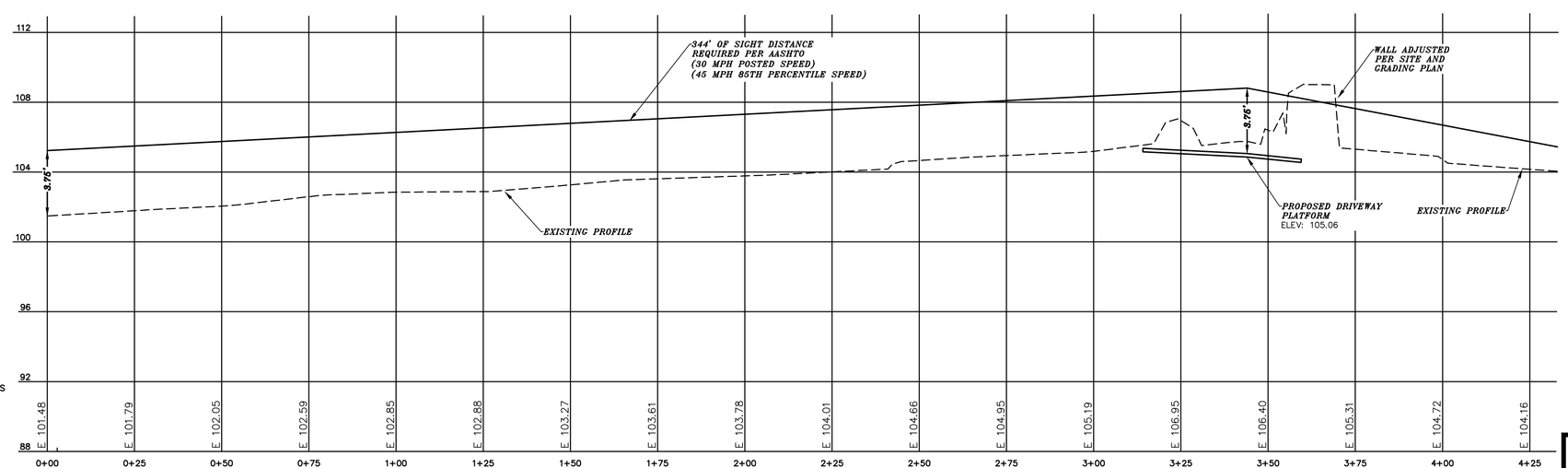


**DOT-1**

DOVER FILE #P18-07

| REVISION | DATE | DESCRIPTION |
|---|---|---|
| #1 | 4-16-18 | REVISED PER TRC COMMENTS OF 4-5-18 |

ENTRANCE SIGHT DISTANCE PROFILE EAST BOUND LANE
RESIDENTIAL SUBDIVISION REVIEW
LAND OF
TDAK & COMPANY LLC
99 SIXTH STREET
DOVER, N.H.
*TAX MAP 35, LOT 57*

BERRY SURVEYING & ENGINEERING
335 SECOND CROWN POINT ROAD
BARRINGTON, NH 03825 (603)332-2863

SCALE : 1 IN. EQUALS 20 FT.
DATE : MARCH 28, 2018
FILE NO. : DB 2017-060

STATE OF NEW HAMPSHIRE
KENNETH A. BERRY
No. 14248
LICENSED
PROFESSIONAL ENGINEER

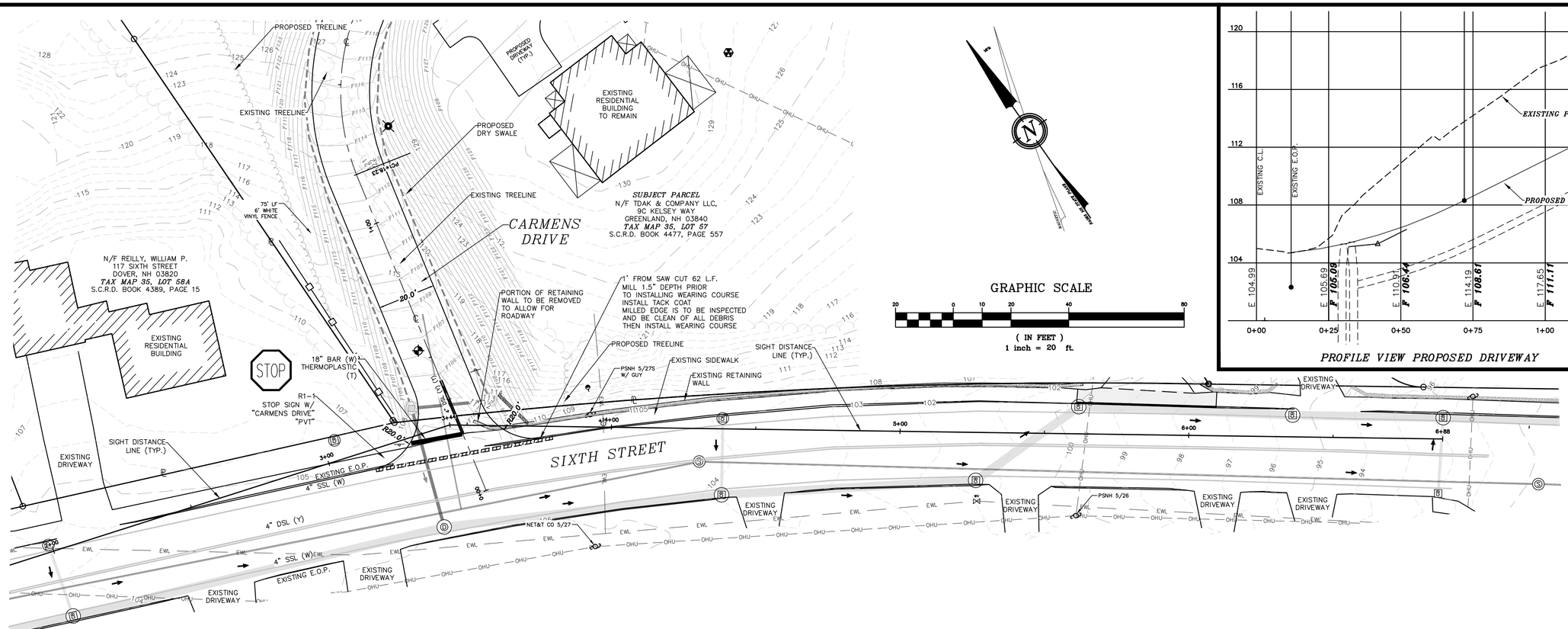


PLAN VIEW SIXTH STREET

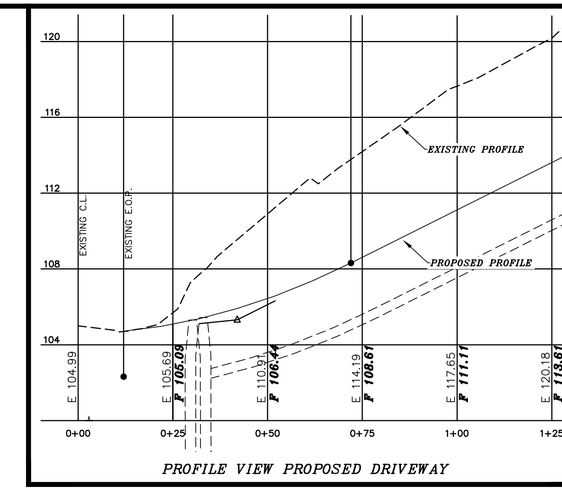


PROFILE VIEW PROPOSED DRIVEWAY

PROFILE VIEW SIGHT LINE

GRAPHIC SCALE

( IN FEET )
1 inch = 20 ft.
VERTICAL SCALE: 1" = 4'

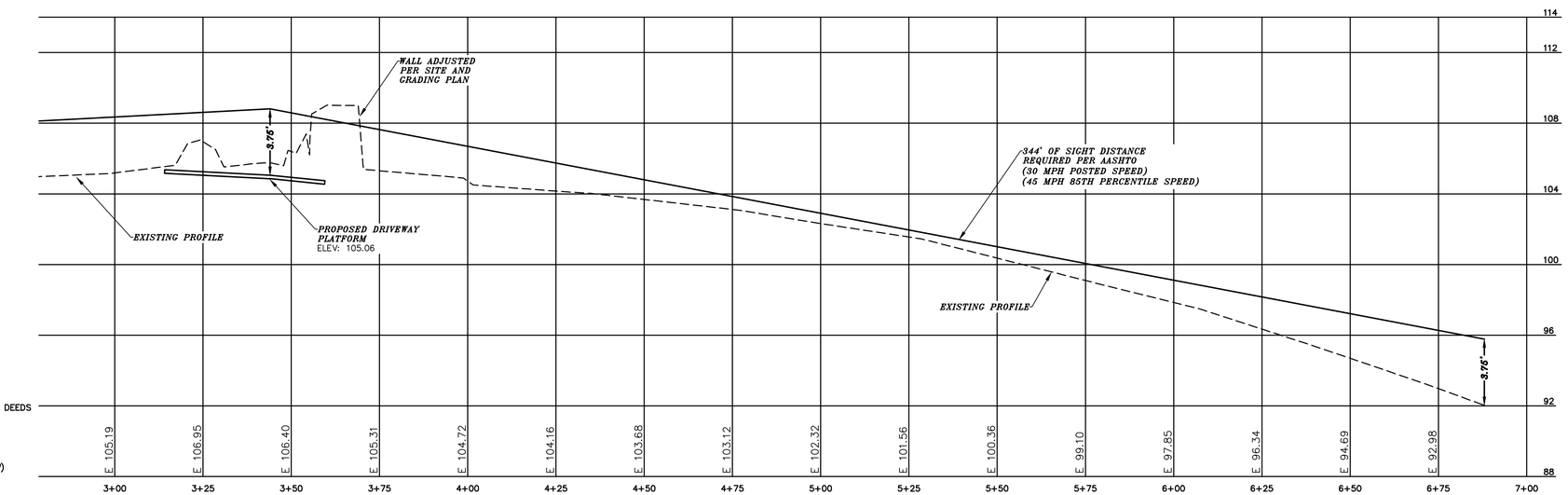


**NOTES:**

1.) OWNER: TDAK & COMPANY LLC
9 KELSEY DRIVE
GREENLAND, NH 03840

2.) DOVER TAX MAP 35, LOT 57

3.) LOT AREA: 90,322 Sq. Ft. 2.07 Ac.

4.) S.C.R.D. BOOK 4477, PAGE 557

5.) THIS IS A RESIDENTIAL DRIVEWAY.

6.) EXISTING CONDITIONS INFORMATION IS BASED ON A SURVEY PERFORMED BY BERRY SURVEYING & ENGINEERING AND IS ENCLOSED IN THIS PACKAGE.

7.) ALL PAVEMENT MARKINGS TO BE PAINTED TO NHDOT STANDARD NO. PM-9.

8.) SEE NHDOT STANDARD PLAN PM-10A FOR WORD AND SYMBOL DETAILS.

9.) THE SPEED LIMIT ON SIXTH STREET IS 30MPH.

10.) WORK WITHIN CITY OF DOVER WILL REQUIRE PROFESSIONAL FLAGGING SERVICES AND POLICE SUPERVISION.

11.) DESIGN ENGINEER TO PROVIDE INSPECTION & OVERSIGHT OF ALL WORK WITHIN R.O.W.

**LEGEND:**

- IRON BOUND (FND)
- UTILITY POLE/GUY WIRE
- OHU — OVERHEAD UTILITES
- EWL — EXISTING WATERLINE
- PROPERTY LINE
- S.C.R.D. — STRAFFORD COUNTY REGISTRY OF DEEDS
- TYP. — TYPICAL
- FND — FOUND
- S.G.C. — SLANTED GRANITE CURB
- PL — PROPERTY LINE
- E.O.P. — EDGE OF PAVEMENT
- SSL (W/Y) — SINGLE SOLD LINE (WHITE/YELLOW)
- SSB (Y) — DOUBLE SOLID LINE (YELLOW)

DOVER FILE #P18-07

| REVISION | DATE | DESCRIPTION |
|---|---|---|
| #1 | 4-16-18 | REVISED PER TRC COMMENTS OF 4-5-18 |

ENTRANCE SIGHT DISTANCE PROFILE WEST BOUND LANE
RESIDENTIAL SUBDIVISION REVIEW
LAND OF
TDAK & COMPANY LLC
99 SIXTH STREET
DOVER, N.H.
TAX MAP 35, LOT 57

BERRY SURVEYING & ENGINEERING
335 SECOND CROWN POINT ROAD
BARRINGTON, NH 03825 (603)332-2863

SCALE : 1 IN. EQUALS 20 FT.
DATE : MARCH 28, 2018
FILE NO. : DB 2017-060

STATE OF NEW HAMPSHIRE
KENNETH A. BERRY
No. 7824
LICENSED
PROFESSIONAL ENGINEER

DOT-2

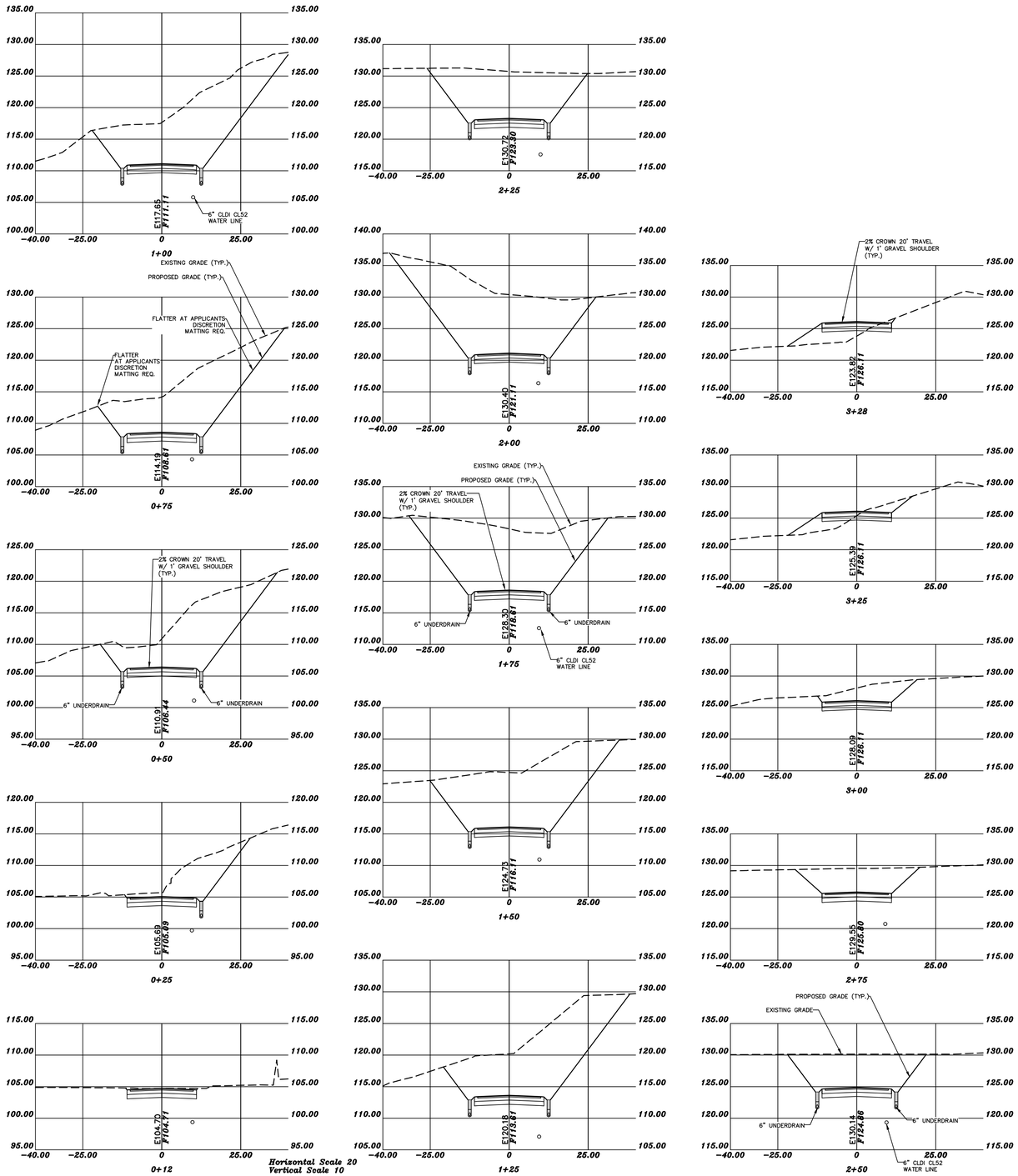


GRAPHIC SCALE

( IN FEET )
1 inch = 20 ft.
*Vertical Scale 1 inch = 10 ft.*

DOVER FILE #P18-07

| REVISION | DATE | DESCRIPTION |
|---|---|---|
| #1 | 4-16-18 | REVISED PER TRC COMMENTS OF 4-5-18 |

CROSS SECTIONS 0+00 – END
RESIDENTIAL SUBDIVISION REVIEW
LAND OF
TDAK & COMPANY LLC
99 SIXTH STREET
DOVER, N.H.
*TAX MAP 35, LOT 57*

BERRY SURVEYING & ENGINEERING
335 SECOND CROWN POINT ROAD
BARRINGTON, NH 03825 (603)332-2863

SCALE : 1 IN. EQUALS 20 FT.
DATE : MARCH 28, 2018
FILE NO. : DB 2017-060

STATE OF NEW HAMPSHIRE
KENNETH A. BERRY
No. 4293
LICENSED
PROFESSIONAL ENGINEER

## E1

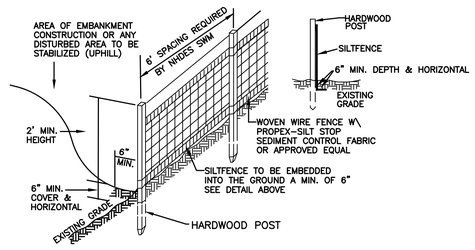


SILT FENCE CONSTRUCTION SPECIFICATIONS

1. WOVEN WIRE FENCE TO BE FASTENED SECURELY TO FENCE POSTS WITH WIRE TIES OR STAPLES AND FILTER CLOTH SHALL BE FASTENED TO WOVEN WIRE EVERY 24" AT TOP MID AND BOTTOM SECTIONS AND BE EMBEDDED INTO GROUND A MINIMUM OF 8" THE FENCE POSTS SHALL BE A MINIMUM 48" LONG, SPACED A MAXIMUM 10' APART, AND DRIVEN A MINIMUM OF 16" INTO THE GROUND.
2. WHEN TWO SECTIONS OF FILTER CLOTH ADJOIN EACH OTHER, THE ENDS OF THE FABRIC SHALL BE OVERLAPPED BY SIX INCHES, FOLDED AND STAPLED TO PREVENT SEDIMENT FROM BY-PASSING.
3. MAINTENANCE SHALL BE PERFORMED AS NEEDED AND SEDIMENT REMOVED WHEN "BULGES" DEVELOP IN THE SILT FENCE AND PROPERLY DISPOSED OF. SEE MAINTENANCE NOTE BELOW, REMOVAL OF SEDIMENT REQUIRED AT A DEPTH OF 6-INCHES.
4. PLACE THE ENDS OF THE SILT FENCE UP CONTOUR TO PROVIDE FOR SEDIMENT STORAGE.
5. SILT FENCES SHALL BE REMOVED WHEN NO LONGER NEEDED AND THE SEDIMENT COLLECTED SHALL BE DISPOSED AS DIRECTED BY THE ENGINEER.
6. THE AREA DISTURBED BY THE REMOVAL SHALL BE SMOOTHED AND RE-VEGETATED.
7. TO BE CONSTRUCTED IAW NH SWM #3 4-2 SEDIMENT CONTROL PRACTICES, SILT FENCE, PAGE 90.
8. SEE DETAIL E2 FOR CONSTRUCTION OF SILT FENCE ALONG PROPERTY LINES.

SILT FENCE MAINTENANCE

1. SILT FENCES SHALL BE INSPECTED IMMEDIATELY AFTER EACH RAINFALL AND AT LEAST DAILY DURING PROLONGED RAINFALL. ANY REPAIRS THAT ARE REQUIRED SHALL BE MADE IMMEDIATELY.
2. IF THE FABRIC ON A SILT FENCE SHOULD DECOMPOSE OR BECOME INEFFECTIVE DURING THE EXPECTED LIFE OF THE FENCE, THE FABRIC SHALL BE REPLACED PROMPTLY.
3. SEDIMENT DEPOSITS SHOULD BE REMOVED WHEN THEY REACH SIX-INCHES IN DEPTH.
4. SEDIMENT DEPOSITS THAT ARE REMOVED OR LEFT IN PLACE AFTER THE FABRIC HAS BEEN REMOVED SHALL BE GRADED TO CONFORM WITH THE EXISTING TOPOGRAPHY AND VEGETATED.

*SILT FENCE DETAIL*
NOT TO SCALE

## E2

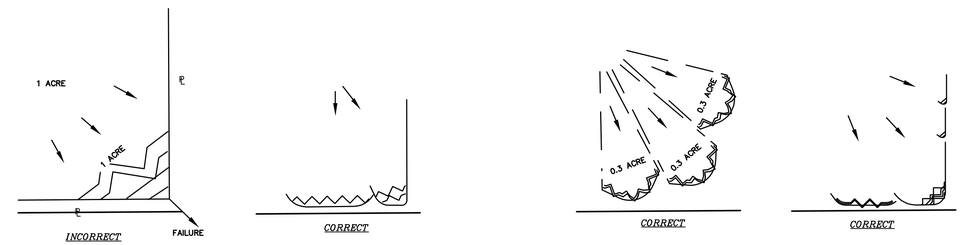


*NOTES*

1. DO NOT LAYOUT PERIMETER CONTROL ALONG SLOPING PROPERTY PERIMETER WITHOUT INSTALLING "J HOOKS" AT HIGH CONCENTRATION AREAS. RUNOFF WILL CONCENTRATE AND CAUSE FAILURES ALONG THE PERIMETER.
2. "J HOOKS" CAN BE USED TO HELP LIMIT THE CONCENTRATION OF RUNOFF AND PROVIDE MORE STABILITY TO THE PERIMETER.
3. SILT FENCE AND EROSION CONTROL MULCH BERM MAY BE USED INTERCHANGEABLY. IN SPECIFIED AREA, SILT FENCE MAY NOT BE SUBSTITUTED FOR FILTREXX SILT SOXX OR APPROVED ALTERNATIVE.
4. SEE HAMPSHIRE STORM WATER MANUAL: VOLUME 3, PAGE 99 FOR FURTHER DETAILS AND SPECIFICATIONS

*PERIMETER CONTROL*
NOT TO SCALE

*DESIGN CONSITERATIONS:*

1. THE MAXIMUM LENGTH OF SLOPE ABOVE PERIMETER CONTROL IS 100 FEET.
2. THE MAXIMUM GRADIENT BEHIND CONTROL WILL NOT EXCEED 5%.
3. THE MAXIMUM CONTRIBUTING DRAINAGE AREA OF ONE-QUARTER ACRE PER 100-FEET OF PRACTICE LENGTH.
4. PERIMETER CONTROL IS TO BE INSTALLED PRIOR TO EARTH MOVING ACTIVITEIS, INCLUDING GRUBBING AND CLEARING.

## E3

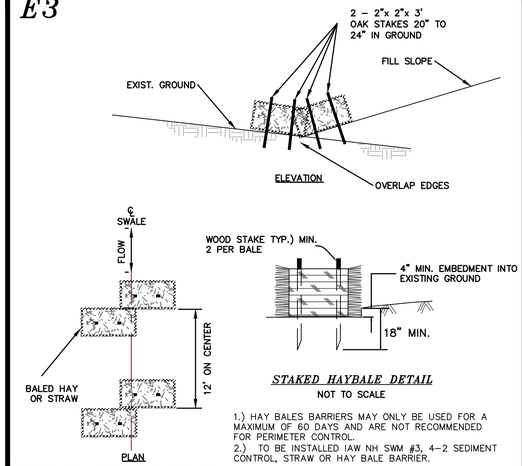


*HAY BALE CHECK DAM DETAIL*
(NOT TO SCALE)

*STAKED HAYBALE DETAIL*
NOT TO SCALE

1.) HAY BALES BARRIERS MAY ONLY BE USED FOR A MAXIMUM OF 60 DAYS AND ARE NOT RECOMMENDED FOR PERIMETER CONTROL.
2.) TO BE INSTALLED IAW NH SWM #3, 4-2 SEDIMENT CONTROL, STRAW OR HAY BALE BARRIER.

## E4 *STABILIZED CONSTRUCTION ENTRANCE*

NOT TO SCALE

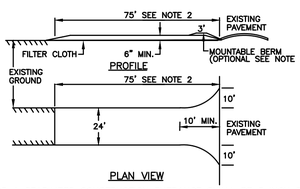


1. STONE FOR A STABILIZED CONSTRUCTION ENTRANCE SHALL BE 3 INCH STONE, RECLAIMED STONE, OR RECYCLED CONCRETE EQUIVALENT.
2. THE LENGTH OF THE STABILIZED ENTRANCE SHALL NOT BE LESS THAN 75 FEET, EXCEPT THAT THE MINIMUM LENGTH MAY BE REDUCED TO 50 FEET IF A 3-INCH TO 6-INCH BERM IS INSTALLED AT THE ENTRANCE OF THE PROJECT SITE.
3. THE THICKNESS OF THE STONE FOR THE STABILIZED ENTRANCE SHALL NOT BE LESS THAN 6 INCHES.
4. THE WIDTH OF THE ENTRANCE SHALL NOT BE LESS THAN THE FULL WIDTH OF THE ENTRANCE WHERE INGRESS OR EGRESS OCCURS OR 10 FEET, WHICH EVER IS GREATER.
5. GEOTEXTILE FILTER CLOTH SHALL BE PLACED OVER THE ENTIRE AREA PRIOR TO PLACING
6. ALL SURFACE WATER THAT IS FLOWING TO OR DIVERTED TOWARD THE CONSTRUCTION ENTRANCE SHALL BE PIPED BENEATH THE ENTRANCE. IF PIPING IS IMPRACTICAL, A BERM WITH 5:1 SLOPES THAT CAN BE CROSSED BY VEHICLES MAY BE SUBSTITUTED FOR THE PIPE.
7. THE ENTRANCE SHALL BE MAINTAINED IN A CONDITION THAT WILL PREVENT TRACKING OR FLOWING OF SEDIMENT ONTO PUBLIC RIGHTS-OF-WAY. THIS MAY REQUIRE PERIODIC TOP DRESSING WITH ADDITIONAL STONE AS CONDITIONS DEMAND AND REPAIR AND/OR CLEAN OUT OF ANY MEASURES USED TO TRAP SEDIMENT. ALL SEDIMENT SPILLED, WASHED, OR TRACKED ONTO PUBLIC RIGHT-OF-WAY MUST BE REMOVED PROMPTLY.
8. TO BE CONSTRUCTED IAW NH SWM #3 4-2 SEDIMENT CONTROL PRACTICES, TEMPORARY CONSTRUCTION EXIT, PAGE 124.

## E5 *EROSION CONTROL MIX BERM*

NOT TO SCALE

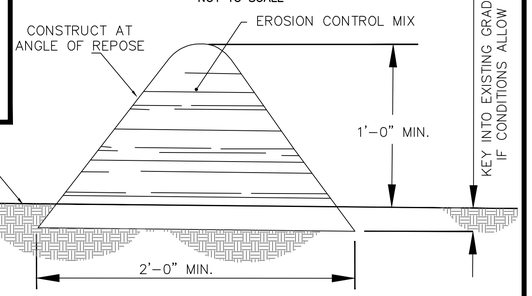


EROSION CONTROL MIX BERMS SHALL BE USED ONLY AS FOLLOWS:

1. BERMS SHALL BE USED IN AREAS WHERE EROSION WILL OCCUR ONLY IN THE FORM OF SHEET EROSION AND THERE IS NO CONCENTRATION OF WATER IN A CHANNEL OR DRAINAGE WAY ABOVE THE BERM.
2. THE BERMS SHALL BE INSTALLED FOLLOWING THE CONTOUR OF THE LAND AS CLOSLY AS POSSIBLE.
3. THE BERMS SHALL BE INSTALLED ON SLOPES LESS THAN 5%.
4. SUBJECT TO (E), BELOW, THE MIX SHALL HAVE AN ORGANIC PORTION BETWEEN 80 AND 100%, DRY WEIGHT BASIS, AND BE FIBROUS AND ELONGATED SUCH AS FROM SHREDDED BARK, STUMP GRINDINGS, COMPOSED BARK, OR EQUIVALENT MANUFACTURED PRODUCTS.
5. WOOD AND BARK CHIPS, GROUND CONSTRUCTION DEBRIS, OR REPROCESSED WOOD PRODUCTS SHALL NOT BE USED AS ORGANIC MATERIAL.
6. THE MIX SHALL NOT CONTAIN SILTS, CLAY, OR FINE SANDS.
7. THE MIX SHALL HAVE A PARTICLE SIZE BY WEIGHT OF 70 TO 85% PASSING A 6-INCH SCREEN AND A MAXIMUM OF 85% PASSING THE 0.75-INCH SCREEN.
8. THE MIX PH SHALL BE BETWEEN 5.0 AND 8.0.
9. THE BERM SHALL BE AT LEAST 12 INCHES HIGH AND AT LEAST 2 FEET WIDE.
10. TO BE CONSTRUCTED IAW NH SWM #3 4-2 SEDIMENT CONTROL PRACTICES, EROSION CONTROL MIX BERMS, PAGE 106.

## E6

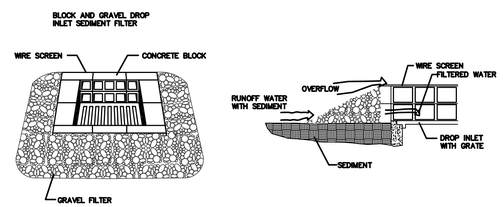


MAINTENANCE

ALL STRUCTURES SHOULD BE INSPECTED AFTER EVERY RAIN STORM AND REPAIRS MADE AS NECESSARY. SEDIMENT SHOULD BE REMOVED FROM TRAPPING DEVICES AFTER THE SEDIMENT HAS REACHED A MAXIMUM OF ONE HALF THE DEPTH OF THE TRAP. THE SEDIMENT SHOULD BE DISPOSED OF IN A SUITABLE AREA AND PROTECTED FROM EROSION BY EITHER STRUCTURE OR VEGETATIVE MEANS. THE TEMPORARY TRAPS SHOULD BE REMOVED AND THE AREA REPAIRED AS SOON AS THE CONTRIBUTING DRAINAGE AREA TO THE INLET HAS BEEN COMPLETELY STABILIZED.

*BLOCK & GRAVEL DROP INLET SEDIMENT FILTER*
NOT TO SCALE

TO BE USED IN ALL AREAS WHERE THERE WILL BE NO TRAFFIC.

TO BE CONSTRUCTED IAW NH SWM #3 4-2 SEDIMENT CONTROL PRACTICES, TEMPORARY STORM DRAIN INLET PROTECTION, PAGE 118.

## E7 *TEMPORARY EROSION CONTROL MEASURES*

1. THE SMALLEST PRACTICAL AREA OF LAND SHALL BE EXPOSED AT ANY ONE TIME.
2. EROSION, SEDIMENT AND DETENTION MEASURES SHALL BE INSTALLED AS SHOWN ON THE PLANS AND AT LOCATIONS AS REQUIRED, DIRECTED BY THE ENGINEER.
3. ALL DISTURBED AREAS SHALL BE RETURNED TO ORIGINAL GRADES AND ELEVATIONS. DISTURBED AREAS SHALL BE LOAMED WITH A MINIMUM OF 4" OF LOAM AND SEEDED WITH NOT LESS THAN ONE POUND OF SEED PER 50 SQUARE YARDS OF AREA. (SEE SEED SPECIFICATIONS THIS SHEET)
4. ALL DISTURBED AREAS WILL BE RESTABILIZED WITHIN 45 DAYS. AT ANY ONE TIME, NO MORE THAN 5 ACRES, (217,800 Sq. Ft.) WILL BE DISTURBED.
5. SILT FENCES AND PERIMETER BARRIERS SHALL BE INSPECTED PERIODICALLY AND AFTER EVERY RAIN DURING THE LIFE OF THE PROJECT. ALL DAMAGED AREAS SHALL BE REPAIRED, SEDIMENT DEPOSITS SHALL PERIODICALLY BE REMOVED AND DISPOSED OF.
6. AFTER ALL DISTURBED AREAS HAVE BEEN STABILIZED, THE TEMPORARY EROSION AND SEDIMENT CONTROL MEASURES ARE TO BE REMOVED AND THE AREA DISTURBED BY THE REMOVAL SMOOTHED AND RE-VEGETATED.
7. PER THE EPA CGP REQUIREMENTS THERE WILL BE REPORTS OF THE EROSION CONTROL INSPECTIONS IAW SWPPP PREPARED BY BS&E. ALL EROSION CONTROLS SHALL BE INSPECTED WEEKLY AND WITHIN 24 HOURS AFTER 0.5" OR GREATER RAIN EVENT.
8. DITCHES, SWALES, AND BASINS SHALL BE STABILIZED PRIOR TO DIRECTING RUNOFF TO THEM.
9. DO NOT TRAFFIC EXPOSED SOIL SURFACES WITH CONSTRUCTION EQUIPMENT. IF FEASIBLE, PERFORM EXCAVATIONS WITH EQUIPMENT POSITIONED OUTSIDE THE LIMITS OF THE INFILTRATION SYSTEM.
10. DRIVEWAYS AND CUT AND FILL SPLOPES MUST BE STABILIZED WITHIN 72 HOURS OF ACHIEVING FINAL GRADE.
11. STABILIZATION MEANS:
    - 11.1. A MINIMUM OF 85% OF VEGETATIVE COVER HAS BEEN ESTABLISHED.
    - 11.2. A MINIMUM OF 3 INCHES OF NON-EROSIVE MATERIAL SUCH AS STONE OR RIP RAP HAS BEEN INSTALLED, OR
    - 11.3. EROSION CONTROL BLANKETS HAVE BEEN INSTALLED.
12. THIS PROJECT IS TO BE MANAGED IN A MANNER THAT MEETS THE REQUIREMENTS AND INTENT OF RSA 430:53 AND CHAPTER AGR 3800 RELATIVE TO INVASIVE SPECIES.
13. THE NHDES STORMWATER MANUAL, IN THREE VOLUMES, DATED DECEMBER 2008, IS A PART OF THIS PLAN SET AND THE MORE RESTRICTIVE WILL GOVERN. (NH SWM)

## E8

*STONE CHECK DAM*
NOT TO SCALE

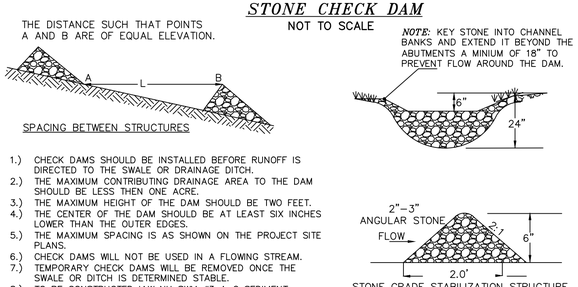


1.) CHECK DAMS SHOULD BE INSTALLED BEFORE RUNOFF IS DIRECTED TO THE SWALE OR DRAINAGE DITCH.
2.) THE MAXIMUM CONTRIBUTING DRAINAGE AREA TO THE DAM SHOULD BE LESS THEN ONE ACRE.
3.) THE MAXIMUM HEIGHT OF THE DAM SHOULD BE TWO FEET.
4.) THE CENTER OF THE DAM SHOULD BE AT LEAST SIX INCHES LOWER THAN THE OUTER EDGES.
5.) THE MAXIMUM SPACING IS AS SHOWN ON THE PROJECT SITE PLANS.
6.) CHECK DAMS WILL NOT BE USED IN A FLOWING STREAM.
7.) TEMPORARY CHECK DAMS WILL BE REMOVED ONCE THE SWALE OR DITCH IS DETERMINED STABLE.
8.) TO BE CONSTRUCTED IAW NH SWM #3 4-2 SEDIMENT CONTROL PRACTICES, TEMPORARY CHECK DAMS, PAGE 114.

## E9

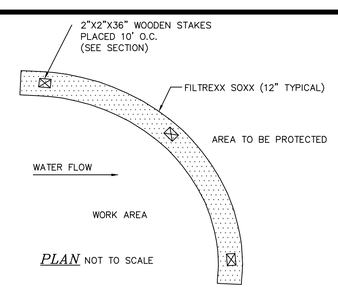


*PLAN* NOT TO SCALE

*NOTES*

1. ALL MATERIAL TO MEET FILTREXX SPECIFICATIONS.
2. FILTER MEDIA FILL TO MEET APPLICATION REQUIRMENTS.
3. COMPOST MATERIAL TO BE DISPERSED ON SITE, AS DETERMINED BY ENGINEER.
4. SILTSOXX MAY BE USED IN PLACE OF SILT FENCE OR OTHER SEDIMENT BARRIERS.
5. SILTSOXX COMPOST/SOIL/ROCK/SEED FILL MATERIAL SHALL BE ADJUSTED AS NECESSARY TO MEET THE REQUIRMENTS OF THE SPECIFIC APPLICATION.
6. FILTREXX SOXX IS A REGISTERED TRADEMARK OF FILTREXXIN TERNATIONAL, LLC.
7. SILT FENCE IS NOT A SUBSTITUTION FOR SILT SOXX AND ANY EQUAL SUBSTITUTION TO BE APPROVED.
8. TO BE CONSTRUCTED IAW FILTREXX, SECTION 1:EROSION & SEDIMENT CONTROL (PAGE 323) - CONSTRUCTION ACTIVITIES, SWPPP CUT SHEET: FILTREXX SEDIMENT CONTROL

*FILTREXX SEDIMENT CONTROL*
NOT TO SCALE

## E10

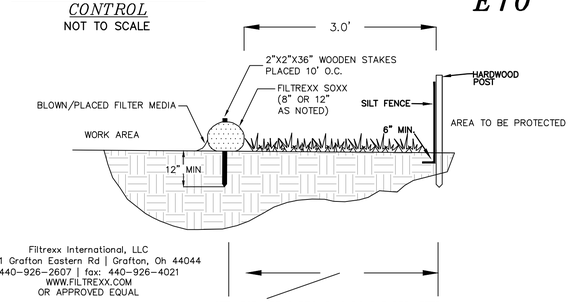


Filtrexx International, LLC
35481 Grafton Eastern Rd | Grafton, Oh 44044
440-926-2607 | fax: 440-926-4021
WWW.FILTREXX.COM
OR APPROVED EQUAL

NOTE: FOR AREAS REQUIRING DOUBLE PERIMETER CONTROL WITHIN 50' OF JURISDICTIONAL WETLANDS AND NOT FOR ALL SILT SOXX APPLICATIONS. THIS DUPLICATION MAY BE SPECIFIED AS 12" SILT SOXX OR ORANGE CONSTRUCTION FENCE AS NOTED.

*SECTION* NOT TO SCALE

## E11

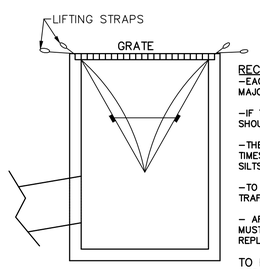


RECOMMENDED MAINTENANCE SCHEDULE

-EACH SILTSACK SHOULD BE INSPECTED AFTER EVERY MAJOR RAIN EVENT, AND MUST BE MAINTAINED.

-IF THERE HAVE BEEN NO MAJOR EVENTS, SILTSACK SHOULD BE INSPECTED EVERY 2-3 WEEKS.

-THE RESTRAINT CORD SHOULD BE VISIBLE AT ALL TIMES. IF CORD IS COVERED WITH SEDIMENT, THE SILTSACK SHOULD BE EMPTIED.

-TO BE USED IN ALL AREAS WHERE THERE WILL BE TRAFFIC.

- ARE SUBJECT TO DAMAGE BY SNOW PLOWS, AND MUST BE INSPECTED AFTER ANY SNOW EVENT AND REPLACED AS REQUIRED.

TO BE CONSTRUCTED IAW NH SWM #3 4-2 SEDIMENT CONTROL PRACTICES, TEMPORARY STORM DRAIN INLET PROTECTION, PAGE 118.

*SILTSACK DETAIL*
NOT TO SCALE

**E-101**

DOVER FILE #P18-07

| REVISION | DATE | DESCRIPTION |
|---|---|---|
| #1 | 4-16-18 | REVISED PER TRC COMMENTS OF 4-5-18 |

SEDIMENT & EROSION CONTROL DETAILS
COMPOSITE DETAILS
RESIDENTIAL SUBDIVISION REVIEW
LAND OF
TDAK & COMPANY LLC
99 SIXTH STREET
DOVER, N.H.
*TAX MAP 35, LOT 57*


BERRY SURVEYING & ENGINEERING
335 SECOND CROWN POINT ROAD
BARRINGTON, NH 03825 (603)332-2863


SCALE: AS NOTED
DATE : MARCH 28, 2018
FILE NO. : DB 2017-060

STATE OF NEW HAMPSHIRE — KENNETH A. BERRY No. 14143 — LICENSED PROFESSIONAL ENGINEER

## E12

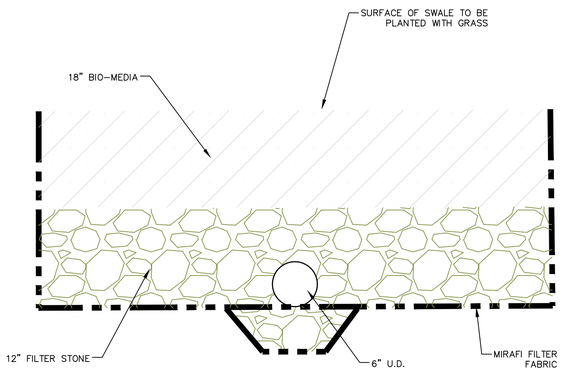


*DRY SWALE DETAIL*

NOT TO SCALE

## E13

CRUSHED STONE BEDDING *

| SIEVE SIZE | % PASSING BY WEIGHT |
|---|---|
| 1" | 100 |
| 3/4" | 90 – 100 |
| 3/8" | 20 – 55 |
| # 4 | 0 –10 |
| # 8 | 0 – 5 |

* EQUIVALENT TO STANDARD STONE SIZE #67 – SECTION 702 OF NHDOT NHDOT STANDARD SPECIFICATIONS

CRUSHED STONE BEDDING *

| SIEVE SIZE | % PASSING BY WEIGHT |
|---|---|
| 1/2" | 100 |
| 3/8" | 90 – 100 |
| #4" | 20 – 55 |
| # 8 | 5 –30 |
| # 16 | 0 – 10 |
| # 50 | 0 – 5 |

* EQUIVALENT TO STANDARD STONE SIZE #89 – SECTION 702 OF NHDOT NHDOT STANDARD SPECIFICATIONS

FILTER MEDIA MIXTURES

| Component Material | Percent of Mixture by Volume | Gradation of material | |
|---|---|---|---|
| | | Sieve No. | Percent by Weight Passing Standard Sieve |
| Filter Media Option A | | | |
| ASTM C–33 concrete sand | 50 to 55 | | |
| Loamy sand topsoil, with fines as indicated | 20 to 30 | 200 | 15 to 25 |
| Moderately fine shredded bark or wood fiber mulch, with fines as indicated | 20 to 30 | 200 | < 5 |

TABLE 7–24––RECOMMENDED RIP RAP GRADATION RANGES

d50 SIZE= 0.5 FEET 6 INCHES

| % OF WEIGHT SMALLER THAN THE GIVEN d50 SIZE | SIZE OF STONE (INCHES) FROM | TO |
|---|---|---|
| 100% | 9 | 12 |
| 85% | 8 | 11 |
| 50% | 6 | 9 |
| 15% | 2 | 3 |

## E14

## E15

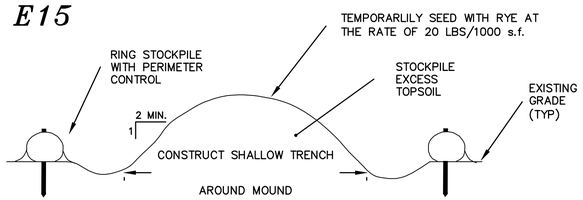


1.) TO BE CONSTRUCTED IAW NH SWM #3 CHAPTER 4–1, EROSION PRACTICE, SOIL STOCKPILE PRACTICES, PAGE 46.

*TOPSOIL STOCKPILE MOUND*

NOT TO SCALE

## E16

*WINTER STABILIZATION NOTES*

1. ALL DISTURBED AREAS THAT DO NOT HAVE AT LEAST 85% VEGETATIVE COVERAGE PRIOR TO OCTOBER 15TH, SHALL BE STABILIZED BY APPLYING MULCH AT A RATE OF 3–4 TONS PER ACRE. ALL SIDE SLOPES, STEEPER THAN 4:1, THAT ARE NOT DIRECTED TO SWALES OR DETENTION BASINS, SHALL BE LINED WITH BIODEGRADABLE/PHOTODEGRADABLE "JUTE MATTING" (EXCELSIOR'S CURLEX II OR EQUAL). ALL OTHER SLOPES SHALL BE MULCHED AND TACKED AT A RATE OF 3–4 TONS PER ACRE. THE APPLICATION OF MULCH AND/OR JUTE MATTING SHALL NOT OCCUR OVER EXISTING SNOW COVER. IF THE SITE IS ACTIVE AFTER NOVEMBER 15TH, ANY SNOW THAT ACCUMULATES ON DISTURBED AREAS SHALL BE REMOVED. PRIOR TO SPRING THAW ALL AREAS WILL BE STABILIZED, AS DIRECTED ABOVE.

2. ALL SWALES THAT DO NOT HAVE FULLY ESTABLISHED VEGETATION SHALL BE EITHER LINED WITH TEMPORARY JUTE MATTING OR TEMPORARY STONE CHECK DAMS (APPROPRIATELY SPACED). STONE CHECK DAMS WILL BE MAINTAINED THROUGHOUT THE WINTER MONTHS. IF THE SWALES ARE TO BE MATTED WITH PERMANENT LINERS OR RIPRAP WITH ENGINEERING FABRIC, THIS SHALL BE COMPLETED PRIOR TO WINTER SHUTDOWN OR AS SOON AS THEY ARE PROPERLY GRADED AND SHAPED.

3. PRIOR TO NOV. 15TH ALL ROADWAY AND PARKING AREAS SHALL BE BROUGHT UP TO AND THROUGH THE BANK RUN GRAVEL APPLICATION. IF THESE AREAS' ELEVATIONS ARE PROPOSED TO REMAIN BELOW THE PROPOSED SUBGRADE ELEVATION, THE SUBGRADE MATERIAL SHALL BE ROUGHLY CROWNED AND A 3" LAYER OF CRUSHED GRAVEL SHALL BE PLACED AND COMPACTED. THIS WILL ALLOW THE SUBGRADE TO SHED RUNOFF AND WILL REDUCE ROADWAY EROSION. THIS CRUSHED GRAVEL DOES NOT HAVE TO CONFORM TO NH DOT 304.3, BUT SHALL HAVE BETWEEN 15–25% PASSING THE #200 SIEVE AND THE LARGEST STONE SIZE SHALL BE 2". IF THE SITE IS ACTIVE AFTER NOVEMBER 15TH, ANY ACCUMULATED SNOW SHALL BE REMOVED FROM ALL ROADWAY AND PARKING AREAS.

4. AFTER OCTOBER 15TH, THE END OF NEW HAMPSHIRE'S AVERAGE GROWING SEASON, NO ADDITIONAL LOAM SHALL BE SPREAD ON SIDE SLOPES AND SWALES. THE STOCKPILES THAT WILL BE LEFT UNDISTURBED UNTIL SPRING SHALL BE SEEDED BY THIS DATE. AFTER OCTOBER 15TH, ANY NEW OR DISTURBED PILES SHALL BE MULCHED AT A RATE OF 3–4 TONS PER ACRE. ALL STOCKPILES THAT WILL REMAIN THROUGHOUT THE WINTER SHALL BE SURROUNDED WITH SILT FENCING.

## E17

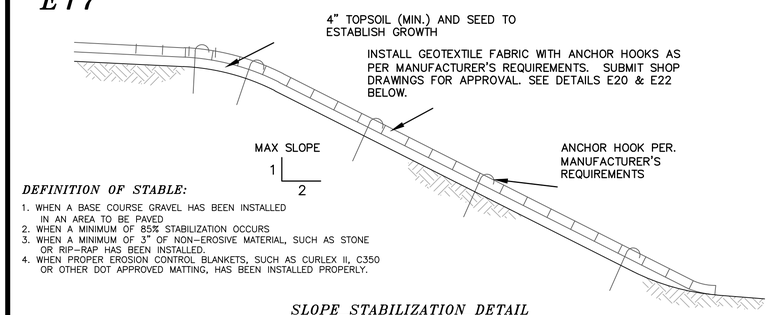


*DEFINITION OF STABLE:*

1. WHEN A BASE COURSE GRAVEL HAS BEEN INSTALLED IN AN AREA TO BE PAVED
2. WHEN A MINIMUM OF 85% STABILIZATION OCCURS
3. WHEN A MINIMUM OF 3" OF NON–EROSIVE MATERIAL, SUCH AS STONE OR RIP–RAP HAS BEEN INSTALLED.
4. WHEN PROPER EROSION CONTROL BLANKETS, SUCH AS CURLEX II, C350 OR OTHER DOT APPROVED MATTING, HAS BEEN INSTALLED PROPERLY.

*SLOPE STABILIZATION DETAIL*

NOT TO SCALE

## E18

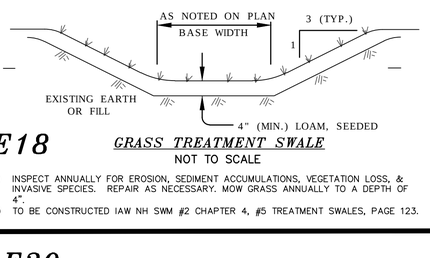


*GRASS TREATMENT SWALE*

NOT TO SCALE

1.) INSPECT ANNUALLY FOR EROSION, SEDIMENT ACCUMULATIONS, VEGETATION LOSS, & INVASIVE SPECIES. REPAIR AS NECESSARY. MOW GRASS ANNUALLY TO A DEPTH OF 4".
2.) TO BE CONSTRUCTED IAW NH SWM #2 CHAPTER 4, #5 TREATMENT SWALES, PAGE 123.

## E19

NOTE: Temporary seed mix for stabilization of turf shall be winter rye or oats at a rate of 2.5 lbs. per 1000 s.f. and shall be placed prior to OCT. 15, if permanent seeding not yet complete.

SEEDING GUIDE

| USE | SEEDING MIXTURE 1/ | DROUGHTY | WELL DRAINED | MODERATELY WELL DRAINED | POORLY DRAINED |
|---|---|---|---|---|---|
| STEEP CUTS AND FILLS, BORROW AND DISPOSAL AREAS | A | FAIR | GOOD | GOOD | FAIR |
| | B | POOR | GOOD | FAIR | FAIR |
| | C | POOR | GOOD | EXCELLENT | GOOD |
| | D | FAIR | FAIR | GOOD | EXCELLENT |
| | E | FAIR | EXCELLENT | EXCELLENT | POOR |
| WATERWAYS, EMERGENCY SPILLWAYS, AND OTHER CHANNELS WITH FLOWING WATER. | A | GOOD | GOOD | GOOD | FAIR |
| | C | GOOD | EXCELLENT | EXCELLENT | FAIR |
| | D | GOOD | EXCELLENT | EXCELLENT | FAIR |
| LIGHTLY USED PARKING LOTS, ODD AREAS, UNUSED LANDS, AND LOW INTENSITY USE RECREATION SITES. | A | GOOD | GOOD | GOOD | FAIR |
| | B | GOOD | GOOD | FAIR | POOR |
| | C | GOOD | EXCELLENT | EXCELLENT | FAIR |
| | D | FAIR | GOOD | GOOD | EXCELLENT |
| PLAY AREAS AND ATHLETIC FIELDS. (TOPSOIL IS ESSENTIAL FOR GOOD TURF.) | F | FAIR | EXCELLENT | EXCELLENT | 2/ |
| | G | FAIR | EXCELLENT | EXCELLENT | 2/ |

GRAVEL PIT, SEE NH–PM–24 IN APPENDIX FOR RECOMMENDATION REGARDING RECLAMATION OF SAND AND GRAVEL PITS.

1/ REFER TO SEEDING MIXTURES AND RATES IN TABLE 7–36.
2/ POORLY DRAINED SOILS ARE NOT DESIRABLE FOR USE AS PLAYING AREA AND ATHLETIC FIELDS.

SEEDING RATES

| MIXTURE | POUNDS PER ACRE | POUNDS PER 1,000 Sq. Ft. |
|---|---|---|
| A. TALL FESCUE | 20 | 0.45 |
| CREEPING RED FESCUE | 20 | 0.45 |
| RED TOP | 2 | 0.05 |
| TOTAL | 42 | 0.95 |
| B. TALL FESCUE | 15 | 0.35 |
| CREEPING RED FESCUE | 10 | 0.25 |
| CROWN VETCH | 15 | 0.35 |
| OR | | |
| FLAT PEA | 30 | 0.75 |
| TOTAL | 40 OR 55 | 0.95 OR 1.35 |
| C. TALL FESCUE | 24 | 0.55 |
| CREEPING RED FESCUE | 24 | 0.55 |
| BIRDS FOOT TREFOIL | REMOVED | REMOVED |
| TOTAL | 48 | 1.10 |
| D. TALL FESCUE | 20 | 0.45 |
| FLAT PEA | 30 | 0.75 |
| TOTAL | 50 | 1.20 |
| E. CREEPING RED FESCUE 1/ | 50 | 1.15 |
| KENTUCKY BLUEGRASS 1/ | 50 | 1.15 |
| TOTAL | 100 | 2.30 |
| F. TALL FESCUE 1 | 150 | 3.60 |

RECOMMENDED *

SEEDING SPECIFICATIONS

1. Grading and Shaping
   a. Slopes shall not be steeper than 2:1;3:1 slopes or flatter are preferred. Where mowing will be done, 3:1 slopes or flatter are recommended.
2. Seedbed Preparation
   a. Surface and seepage water should be drained or diverted from the site to prevent drowning or winter killing of the plants.
   b. Stones larger than 4 inches and trash should be removed because they interfere with seeding and future maintenance of the area. Where feasible, the soil should be tilled to a depth of about 4 inches to prepare a seedbed and mix fertilizer and lime into the soil. The seedbed should be left in reasonably firm and smooth condition. The last tillage should be performed across the slope wherever practical.
3. Establishing a Stand
   a. Lime and fertilizer should be applied prior to or at the time of seeding and incorporated into the soil kinds and amounts of lime and fertilizer should be based on an evaluation of soil tests. When a soil test is not available, the following minimum amounts should be applied:

   Agricultural limestone, 2 tons per acre or 100lbs. per 1,000 sq.ft.

   Nitrogen(N), 50lbs. per acre or 1.1lbs. per 1,000 sq.ft.

   Phosphate(P205), 100lbs. per acre or 2.2lbs. per 1,000 sq.ft.

   Potash(K20), 100lbs. per acre or 2.2lbs. per 1,000 sq.ft.

   (Note: This is the equivalent of 500lbs. per acre of 10–20–20 fertilizer or 1,000lbs. per acre of 5–10–10.)

   b. Seed should be spread uniformly by the method most appropriate for the site. Methods include broadcasting, drilling and hydroseeding. Where broadcasting is used, cover seed with .25 inch of soil or less, by cultipacking or raking.
   C. Refer to Table(G–E1 this sheet) for appropriate seed mixtures and Table(H–E1 this sheet) for rates of seeding. All legumes (crownvetch, birdsfoot trefoil, and flatpea) must be inoculated with their specific inoculant.
   d. When seeded areas are mulched, plantings may be made from early spring to early October. When seeded areas are not mulched, plantings should be made from early spring to May 20 or from August 10 to September 1.

   4.Mulch

   a. Hay, straw, or other mulch, when needed, should be applied immediately after seeding.
   b. Mulch will be held in place using appropriate techniques from the Best Management Practice for mulching. Hay or straw mulch shall be placed at a rate of 90lbs per 1000 s.f.

   5. Maintenance to Establish a Stand

   a. Planted area should be protected from damage by fire, grazing, traffic, and dense weed growth.
   b. Fertilization needs should be determined by onsite inspections. Supplemental fertilizer is usually the key to fully complete the establishment of the stand because most perennial stake 2 to 3 years to become established.
   c. In waterways, channels, or swales where uniform flow conditions are anticipated, occasional mowing may be necessary to control growth of woody vegetation.

## E20

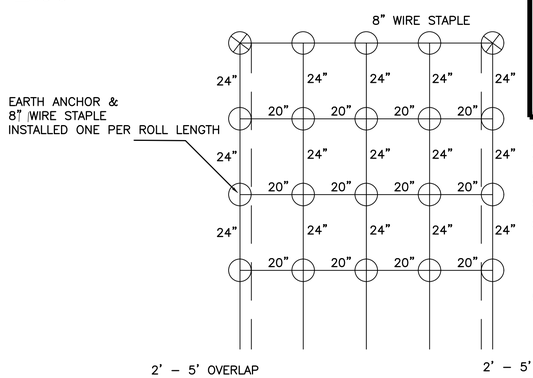


3.4 STAPLES PER SQ YD
TOTAL WIDTH: 6' 8"

*VMAX3 MATTING*
*STAPLE PATTERN GUIDE*

## E21

| CONSERVATION MIX | POUNDS PER ACRE | POUNDS PER 1,000 S.F. |
|---|---|---|
| RED FESCUE (35%) | 75 | 1.75 |
| TALL FESCUE (25%) | 55 | 1.25 |
| ANNUAL RYEGRASS (12%) | 33 | 0.75 |
| PERENNIAL RYEGRASS (10%) | 26 | 0.60 |
| KENTUCKY BLUEGRASS (10%) | 22 | 0.50 |
| WHITE CLOVER (3%) | 7 | 0.15 |

1.) THE BEGINNING AND END OF EACH ROW OF NAG VMAX C350 WILL BE BURIED SIX TO 12 INCHES DEEP.
2.) AT THE TOP OF EACH ROW WHERE THE ROWS OVERLAP, AN EARTH ANCHOR WILL BE INSTALLED TO A MINIMUM DEPTH OF 30 INCHES.
3.) STAPLES WILL BE INSTALLED AT A RATE OF 3.4 STAPLES PER SQUARE YARD AS DEMONSTRATED.
4.) STAPLES WILL BE INSTALLED TO A MINIMUM DEPTH OF 8 INCHES.
5.) ROWS OF NAG ROLLMAX WILL BE INSTALLED PARALLEL WITH AN AVERAGE OF THREE AND ONE–HALF INCHES OF OVERLAP. STAPLES WILL BE INSTALLED ALONG THE OVERLAP SEAM, AS SHOWN.
6.) MATTING TO BE USED ON ALL SLOPES GREATER THAN 3:1. TURF REINFORCEMENT TO BE USED ON SLOPES GREATER THAN 2:1.
7.) TEMPORARY EROSION CONTROL BLANKET OR ROLLED EROSION CONTROL BLANKET (RECB) ARE TO BE INSTALLED IAW NH SWM #3 4–1 TEMPORARY EROSION CONTROL BLANKET, PAGE 68. NORTH AMERICAN GREEN VMAX C–350 TURF REINFORCEMENT MAT IS TO BE INSTALLED IAW MANUFACTURERS RECOMMENDATIONS, OR APPROVED EQUAL. AMERICAN EXCELSIOR COMPANY CURLEX BLANKETS ARE TO BE INSTALLED IAW MANUFACTURERS RECOMMENDATIONS, OR APPROVED EQUAL.
8.) IF SPECIFIED, WILDLIFE FRIENDLY RECB SUCH AS AEC CURLEX III FIBRENET, NAG S150BN, OR EAST COAST EROSION CONTROL ECC–2B, ARE NOT TO BE SUBSTITUTED UNLESS AN ALTERNATIVE IS APPROVED BY THE PROJECT ENGINEER, NHF&G AND NHDES.

## E22

*VMAX C350 MATTING & CURLEX II / III*

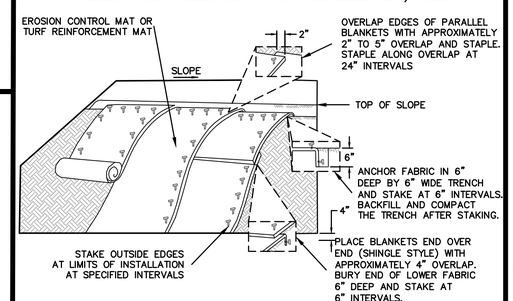


NOTE : STAKING PATTERNS SHALL FOLLOW MANUFACTURERS RECOMMENDATIONS. MINIMUM SPACING ACROSS FABRIC AS SHOWN.

*INSTALLATION OF*
*EROSION CONTROL BLANKET*

NOT TO SCALE

## E23

*CONSTRUCTION SEQUENCE:*

1.) ALL SEDIMENT & EROSION CONTROLS ARE TO BE INSTALLED PRIOR TO ANY EARTH MOVING DISTURBANCE (STUMPING)
CUT AND REMOVE TREES IN CONSTRUCTION AREA ONLY AS REQUIRED AFTER INSTALLATION OF SEDIMENT & EROSION CONTROLS. ALL EROSION CONTROLS SHALL BE INSPECTED WEEKLY AND AFTER EVERY HALF–INCH OF RAINFALL.
2.) CONSTRUCT AND/OR INSTALL TEMPORARY AND PERMANENT SEDIMENT EROSION AND DETENTION CONTROL FACILITIES AS REQUIRED.
3.) DETENTION CONTROL FACILITY SHALL BE INSTALLED & STABILIZED PRIOR TO ANY EARTH MOVING OPERATION & OR DIRECTING RUNOFF TO THEM. DITCHES AND SWALES SHALL BE STABILIZED PRIOR TO DIRECTING RUNOFF TO THEM.
4.) CLEAR, CUT AND DISPOSE OF DEBRIS IN APPROVED FACILITY.
5.) CONSTRUCT TEMPORARY CULVERTS AS REQUIRED, OR DIRECTED
6.) CONSTRUCT ROADWAYS FOR ACCESS TO DESIRED CONSTRUCTION AREAS. ALL ROADS SHALL BE STABILIZED IMMEDIATELY AFTER GRADING. PONDS AND SWALES SHALL BE INSTALLED EARLY ON IN THE CONSTRUCTION SEQUENCE (BEFORE ROUGH GRADING THE SITE.)
7.) INSTALL PIPE AND CONSTRUCTION ASSOCIATED APPURTENANCES AS REQUIRED OR DIRECTED. ALL DISTURBED AREAS SHALL STABILIZED IMMEDIATELY AFTER GRADING.
8.) BEGIN PERMANENT AND TEMPORARY SEEDING AND MULCHING. ALL CUT AND FILL SLOPES AND DISTURBED AREAS SHALL BE SEEDED OR MULCHED AS REQUIRED, OR DIRECTED. NO AREA IS ALLOWED TO BE DISTURBED FOR A LENGTH OF TIME THAT EXCEEDS 45 DAYS BEFORE BEING STABILIZED. DAILY, OR AS REQUIRED.
9.) CONSTRUCT TEMPORARY BERMS, DRAINS DITCHES, SILT FENCES, SEDIMENT TRAPS, ETC. MULCH AND SEED AS REQUIRED.
10.) INSPECT AND MAINTAIN ALL EROSION AND SEDIMENT CONTROL MEASURES DURING CONSTRUCTION
11.) COMPLETE PERMANENT SEEDING AND LANDSCAPING.
12.) REMOVE TEMPORARY EROSION CONTROL MEASURES AFTER SEEDING AREAS HAVE ESTABLISHED THEMSELVES AND SITE IMPROVEMENTS ARE COMPLETE.
13.) SMOOTH AND RE–VEGETATE ALL DISTURBED AREAS.
14.) FINISH PAVING ALL ROADWAYS

INVASIVE SPECIES NOTE:

THAT THE PROJECT IS TO BE MANAGED IN A MANNER THAT MEETS THE REQUIREMENTS AND INTENT OF RSA 430:53 AND CHAPTER AGR 3800 RELATIVE TO INVASIVE SPECIES.

E–102

DOVER FILE #P18–07

| REVISION | DATE | DESCRIPTION |
|---|---|---|
| #1 | 4–16–18 | REVISED PER TRC COMMENTS OF 4–5–18 |

SEDIMENT & EROSION CONTROL DETAILS
COMPOSITE DETAILS

RESIDENTIAL SUBDIVISION REVIEW
LAND OF
TDAK & COMPANY LLC
99 SIXTH STREET
DOVER, N.H.
*TAX MAP 35, LOT 57*


BERRY SURVEYING & ENGINEERING
335 SECOND CROWN POINT ROAD
BARRINGTON, NH 03825 (603)332–2863


SCALE: AS NOTED
DATE : MARCH 28, 2018
FILE NO. : DB 2017–060

STATE OF NEW HAMPSHIRE – KENNETH A. BERRY No. 14243 – LICENSED PROFESSIONAL ENGINEER

## D1

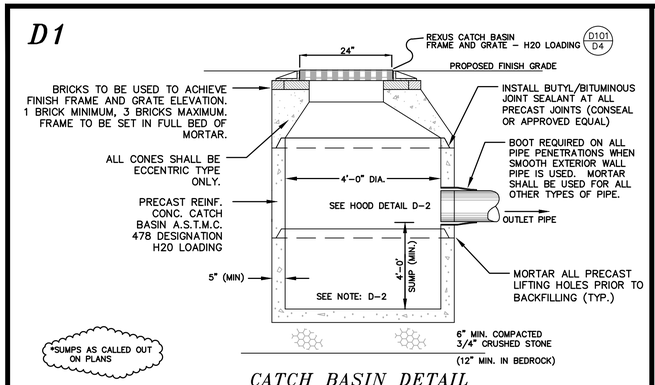


*CATCH BASIN DETAIL*

NOT TO SCALE

SEE SAND FILTER DETAILS AND GRADING AND DRAINAGE SHEETS

## D2

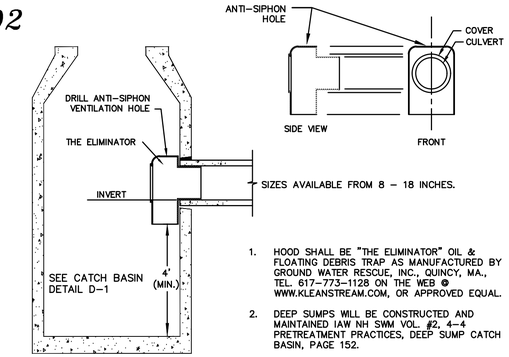


1. HOOD SHALL BE "THE ELIMINATOR" OIL & FLOATING DEBRIS TRAP AS MANUFACTURED BY GROUND WATER RESCUE, INC., QUINCY, MA., TEL. 617-773-1128 ON THE WEB @ WWW.KLEANSTREAM.COM, OR APPROVED EQUAL.
2. DEEP SUMPS WILL BE CONSTRUCTED AND MAINTAINED IAW NH SWM VOL. #2, 4-4 PRETREATMENT PRACTICES, DEEP SUMP CATCH BASIN, PAGE 152.

*CATCH BASIN HOOD DETAIL*

NOT TO SCALE

## D3

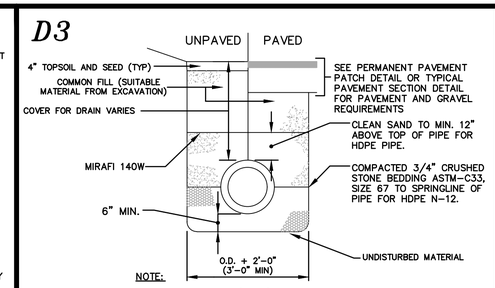


NOTE:

PLASTIC DRAIN PIPE (HDPE) SHALL BE ADS N-12 (CORRUGATED EXTERIOR/SMOOTH INTERIOR) OR EQUAL MEETING AASHTO M-252 AND H-20 LOADING.

*TYPICAL DRAIN TRENCH*

NOT TO SCALE

## D4

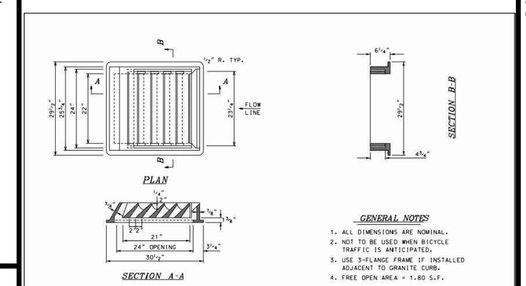


GENERAL NOTES

1. ALL DIMENSIONS ARE NOMINAL.
2. NOT TO BE USED WHEN BICYCLE TRAFFIC IS ANTICIPATED.
3. USE 3-FLANGE FRAME IF INSTALLED ADJACENT TO GRANITE CURB.
4. FREE OPEN AREA = 1.80 S.F.

CATCH BASIN FRAME AND GRATE WILL BE REXUS, OR APPROVED EQUAL, 24 INCH OPENING, DUCTILE IRON, H20 LOADING.

## D5

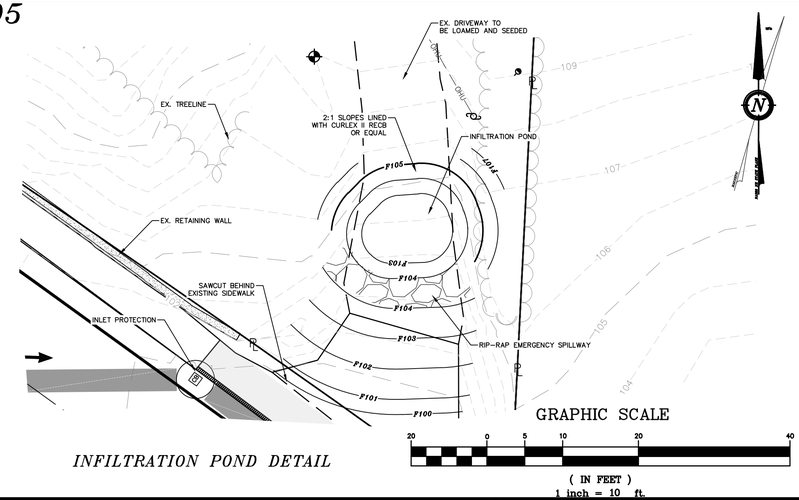


*INFILTRATION POND DETAIL*

## D6

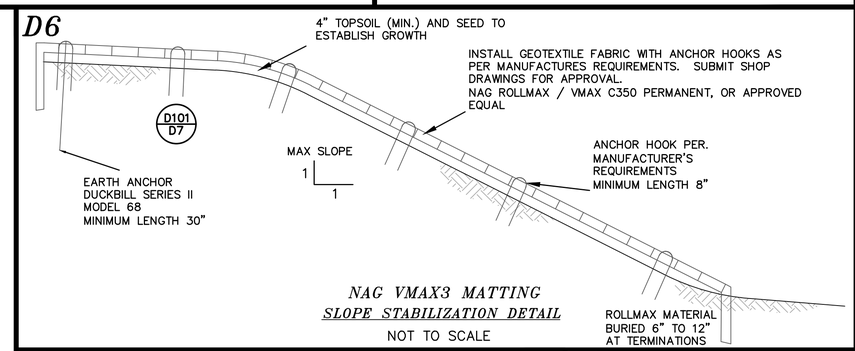


*NAG VMAX3 MATTING*
*SLOPE STABILIZATION DETAIL*

NOT TO SCALE

## D9

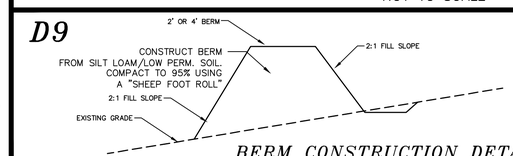


*BERM CONSTRUCTION DETAIL*

## D7

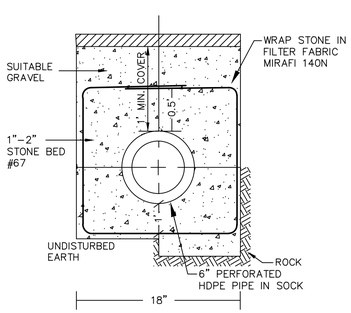


*UNDERDRAIN TRENCH DETAIL*

## D8

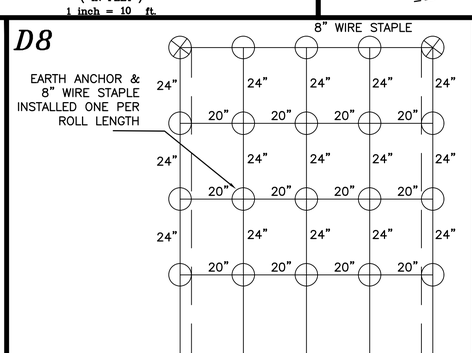


1.) THE BEGINNING AND END OF EACH ROW OF NAG C350 WILL BE BURIED SIX TO 12 INCHES DEEP.
2.) AT THE TOP OF EACH ROW WHERE THE ROWS OVERLAP, AN EARTH ANCHOR WILL BE INSTALLED TO A MINIMUM DEPTH OF 30 INCHES.
3.) STAPLES WILL BE INSTALLED AT A RATE OF 3.4 STAPLES PER SQUARE YARD AS DEMONSTRATED.
4.) STAPLES WILL BE INSTALLED TO A MINIMUM DEPTH OF 8 INCHES.
5.) ROWS OF NAG ROLLMAX WILL BE INSTALLED PARALLEL WITH AN AVERAGE OF THREE AND ONE-HALF INCHES OF OVERLAP. STAPLES WILL BE INSTALLED ALONG THE OVERLAP SEAM, AS SHOWN.

*NAG VMAX3 MATTING*
*STAPLE PATTERN GUIDE*

NOT TO SCALE

## D10

CASTINGS ARE RATED FOR H20 WHEEL LOAD TRAFFIC

PAINT: CASTINGS ARE FURNISHED WITH A BLACK PAINT

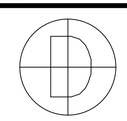

*12" CAST IRON GRATE*

NOT TO SCALE

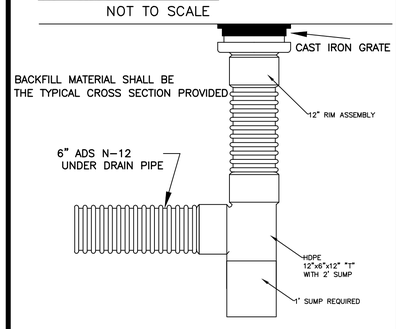


*ADS N-12 INLINE DRAIN*

NOT TO SCALE USED FOR CLEANOUTS

## D11

RISER SECTION

| HEIGHT | ITEM NO | WEIGHT |
|---|---|---|
| 1'-0" | MH4-12CS4ID | 856# |
| 2'-0" | MH4-24CS4ID | 1,712# |
| 2'-6" | MH4-30CS4ID | 2,140# |
| 3'-0" | MH4-36CS4ID | 2,568# |
| 4'-0" | MH4-48CS4ID | 3,424# |
| 5'-0" | MH4-60CS4ID | 4,280# |

BASE SECTION

| HEIGHT | ITEM NO | WEIGHT |
|---|---|---|
| 2'-0" | MH4-24S4ID | 2,640# |
| 2'-6" | MH4-30S4ID | 3,067# |
| 3'-0" | MH4-36S4ID | 3,495# |
| 3'-6" | MH4-42S4ID | 3,922# |
| 4'-0" | MH4-48S4ID | 4,350# |
| 4'-6" | MH4-54S4ID | 4,777# |
| 5'-0" | MH4-60S4ID | 5,205# |
| 5'-6" | MH4-66S4ID | 5,633# |
| 6'-0" | MH4-72S4ID | 6,060# |

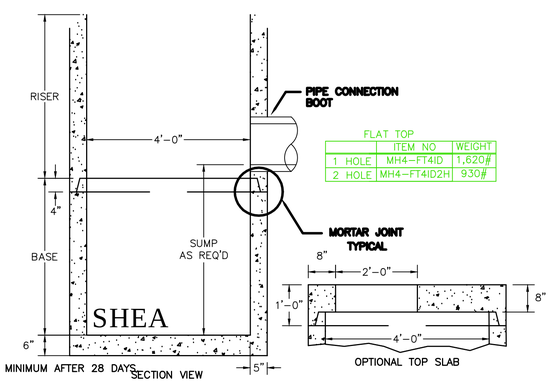


FLAT TOP

| | ITEM NO | WEIGHT |
|---|---|---|
| 1 HOLE | MH4-FT4ID | 1,620# |
| 2 HOLE | MH4-FT4ID2H | 930# |

NOTES:

1. CONCRETE: 4,000 PSI MINIMUM AFTER 28 DAYS.
2. REINFORCED STEEL CONFORMS TO LATEST ASTM A185 SPEC. 0.12 SQ. IN./LINEAL FT. AND 0.12 SQ. IN. (BOTH WAYS) BASE BOTTOM.
3. H-20 DESIGN LOADING PER AASHTO HS-20-44; ASTM C478 SPEC FOR "PRECAST REINFORCED CONCRETE MANHOLE SECTIONS."

*CATCH BASIN DETAIL FLAT TOP*

NOT TO SCALE

REFERENCE IS MADE TO A LONG TERM MAINTENANCE MANUAL PREPARED BY BERRY SURVEYING & ENGINEERING, WHICH IS ON FILE AT THE CITY OF DOVER PLANNING DEPARTMENT, AND CAN BE FOUND AT THE OFFICE OF BERRY SURVEYING & ENGINEERING. (603) 332-2863

D-101

DOVER FILE #P18-07

| REVISION | DATE | DESCRIPTION |
|---|---|---|
| #1 | 4-16-18 | REVISED PER TRC COMMENTS OF 4-5-18 |

DRAINAGE DETAILS

COMPOSITE DETAILS

RESIDENTIAL SUBDIVISION REVIEW
LAND OF
TDAK & COMPANY LLC
99 SIXTH STREET
DOVER, N.H.
*TAX MAP 36, LOT 57*

BERRY SURVEYING & ENGINEERING
335 SECOND CROWN POINT ROAD
BARRINGTON, NH 03825 (603)332-2863

SCALE: AS NOTED
DATE : MARCH 28, 2018
FILE NO. : DB 2017-060

STATE OF NEW HAMPSHIRE
KENNETH A. BERRY
No. 14243
LICENSED
PROFESSIONAL ENGINEER

SHEET 16 OF 22

## C1

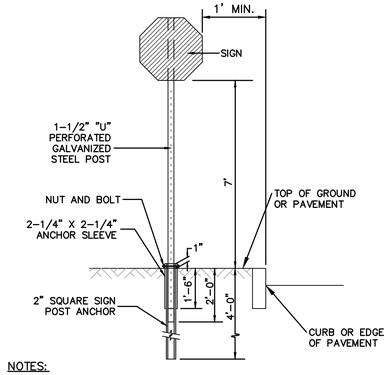


NOTES:

1. ALL SIGNAGE SHALL BE TO THE MANUAL OF UNIFORM TRAFFIC CONTROL DEVICES (MUTCD) STANDARDS AND NHDOT STANDARDS.
2. THE CONTRACTOR SHALL PROVIDE SHOP DRAWINGS/CATALOG CUTS TO THE ENGINEER FOR REVIEW AND APPROVAL PRIOR TO ERECTING SIGNS.
3. THE LOCATION OF THE SIGNS SHALL BE AS INDICATED ON THE DRAWINGS AND/OR AS DIRECTED BY THE CITY OF ROCHESTER DEPARTMENT OF PUBLIC WORKS.

*TYPICAL SIGN POST*

(NOT TO SCALE)

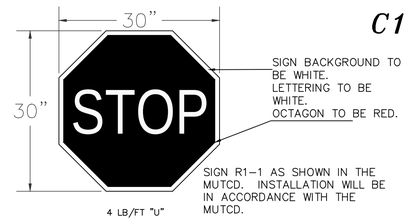

PARTIAL ELEVATION

N.T.S.

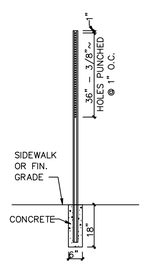


POST

N.T.S.

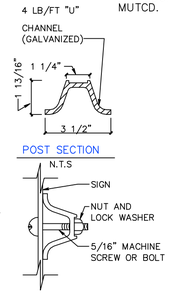


MOUNTING

N.T.S.

## C2

***LIGHTING NOTES:***

1.) POLES TO BE SET SO THAT WIRING EXIT FACES THE ROAD.

2.) ORIENT FIXTURE CORRECTLY AS TO FIELD AND STREET SIDE.

3.) USE GRAY POLE WITH CONTEMPORARY FIXTURE AND BLACK WITH TRADITIONAL. MATERIALS DETERMINED BY UNITIL.

4.) EXTEND DIRECT BURIED CABLE FAR ENOUGH INTO THE POLE TO MAKE THE CONNECTION AT THE HANDHOLE IN THE POLE. EXTEND #14, 2/C COPPER STREET LIGHT CABLE FROM THIS CONNECTION TO THE LUMINAIRE.

5.) 50 WATT TRADITIONAL UNITS ARE FOR N.H. ONLY.

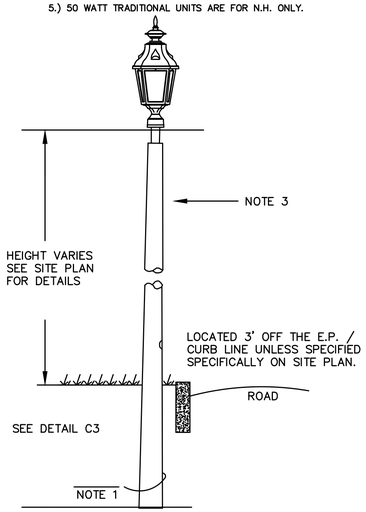


*STREET LAMP DETAIL*

NOT TO SCALE

## C3

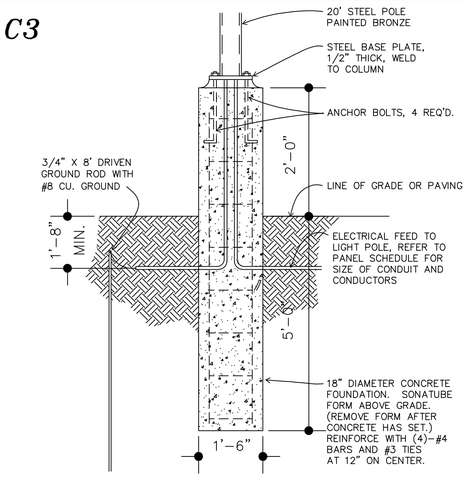


POLE FOUNDATION

*LIGHT BASE DETAIL*

SCALE: NONE

## C4

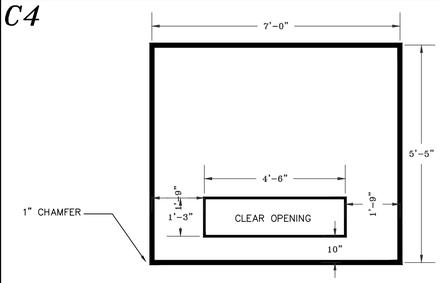


*PLAN VIEW*

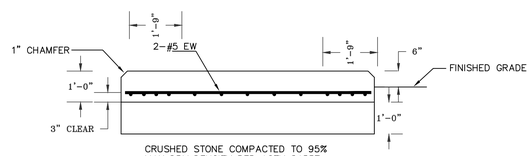


*SECTION VIEW*

NOTES:

1.) CONFIRM SIZE WITH ELECTRIC COMPANY BEFORE CONSTRUCTION.

2.) USE LOCAL ELECTRIC COMPANY DETAILS AS REQUIRED.

*TRANSFORMER PAD DETAIL SHEA CONCRETE*

NOT TO SCALE

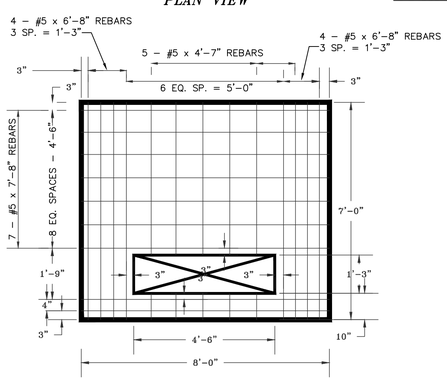


*PLAN OF REINFORCING*

## C5

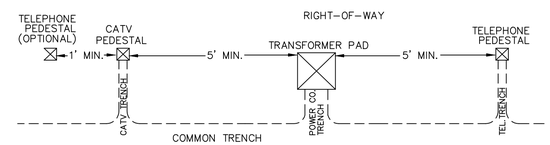


*PEDESTAL PLACEMENT*

## C6

*TYPICAL RESIDENTIAL LAMP "B"*

NOT TO SCALE

LENSES TO BE WHITE ACRYLIC ONE BULB FIXTURE NIGHTSKY (tm) STAR-SHIELD ROOF OPTICS ARE REQUIRED ON ALL LAMPS AND HOUSE SIDE SHIELDS (HSS) WILL BE WILL BE USED TO PREVENT LIGHT FROM SPILLING OVER THE PROPERTY LINES.

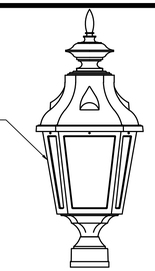

*STREET LIGHTING LAMP "A"*

NOT TO SCALE

## C7

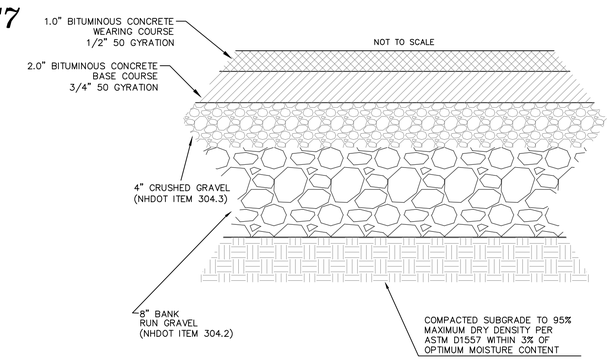


NOTES:

1.) BITUMINOUS MATERIALS SHALL CONFORM TO NHDOT SPECIFICATION SUBSECTION 401.3.6.

2.) PAVEMENT BASE COURSE AGGEGATE SHALL CONFORM TO NHDOT SPECIFICATION SECTION 304, ITEM 304.3 AND COMPACTED TO A MINIMUM OF 95% OF MODIFIED PROCTOR MAXIMUM DRY DENSITY.

3.) PAVEMENT SUBBASE COURSE AGGREGATE AND AGGREGATE FOR SUBGRADE REPAIR AREAS SHALL BE SUITABLE FOR USE AS STRUCTURAL FILL AND BE PROOFROLLED AND COMPACTED TO 95% OF MODIFIED PROCTOR MAXIMUM DRY DENSITY.

*BITUMINOUS CONCRETE PAVEMENT SECTION*

NOT TO SCALE

## C8

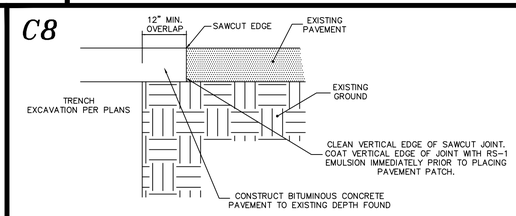


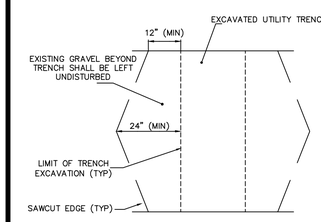


*PLAN*

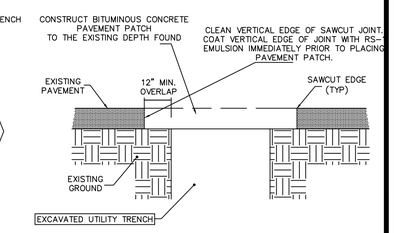


*SECTION*

*NOTES:*

1. MACHINE CUT EXISTING PAVEMENT.
2. ALL TEMPORARY, DAMAGED, OR DEFECTIVE PAVEMENT SHALL BE REMOVED PRIOR TO PLACEMENT OF PERMANENT TRENCH REPAIRS.
3. DIAMOND PATCHES, SHALL BE REQUIRED FOR ALL TRENCHES CROSSING ROADWAY. DIAMOND PATCHES SHALL MEET NHDOT REQUIREMENTS.

*TYPICAL TRENCH PATCH*

NOT TO SCALE

C-101

DOVER FILE #P18-07

| REVISION | DATE | DESCRIPTION |
|---|---|---|
| #1 | 4-16-18 | REVISED PER TRC COMMENTS OF 4-5-18 |

CONSTRUCTION DETAILS

COMPOSITE DETAILS

RESIDENTIAL SUBDIVISION REVIEW

LAND OF

TDAK & COMPANY LLC

99 SIXTH STREET

DOVER, N.H.

*TAX MAP 35, LOT 57*


BERRY SURVEYING & ENGINEERING

335 SECOND CROWN POINT ROAD

BARRINGTON, NH 03825 (603)332-2863


SCALE: AS NOTED

DATE : MARCH 28, 2018

FILE NO. : DB 2017-060

STATE OF NEW HAMPSHIRE — KENNETH A. BERRY — No. 14013 — LICENSED — PROFESSIONAL ENGINEER

## C9

### TYPICAL EDGE LINE CONSTRUCTION
NOT TO SCALE

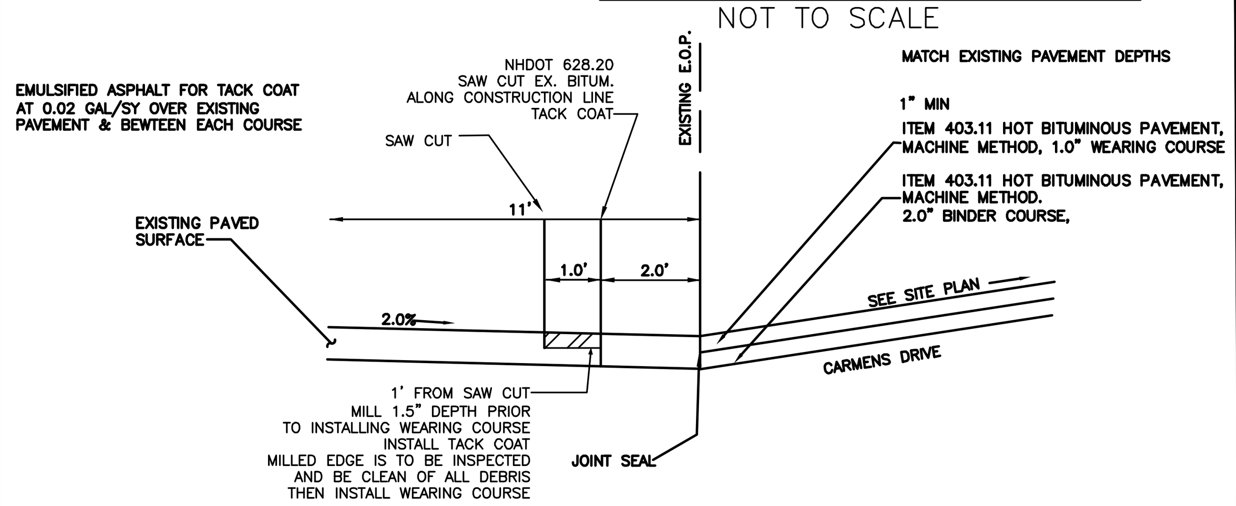


## C10

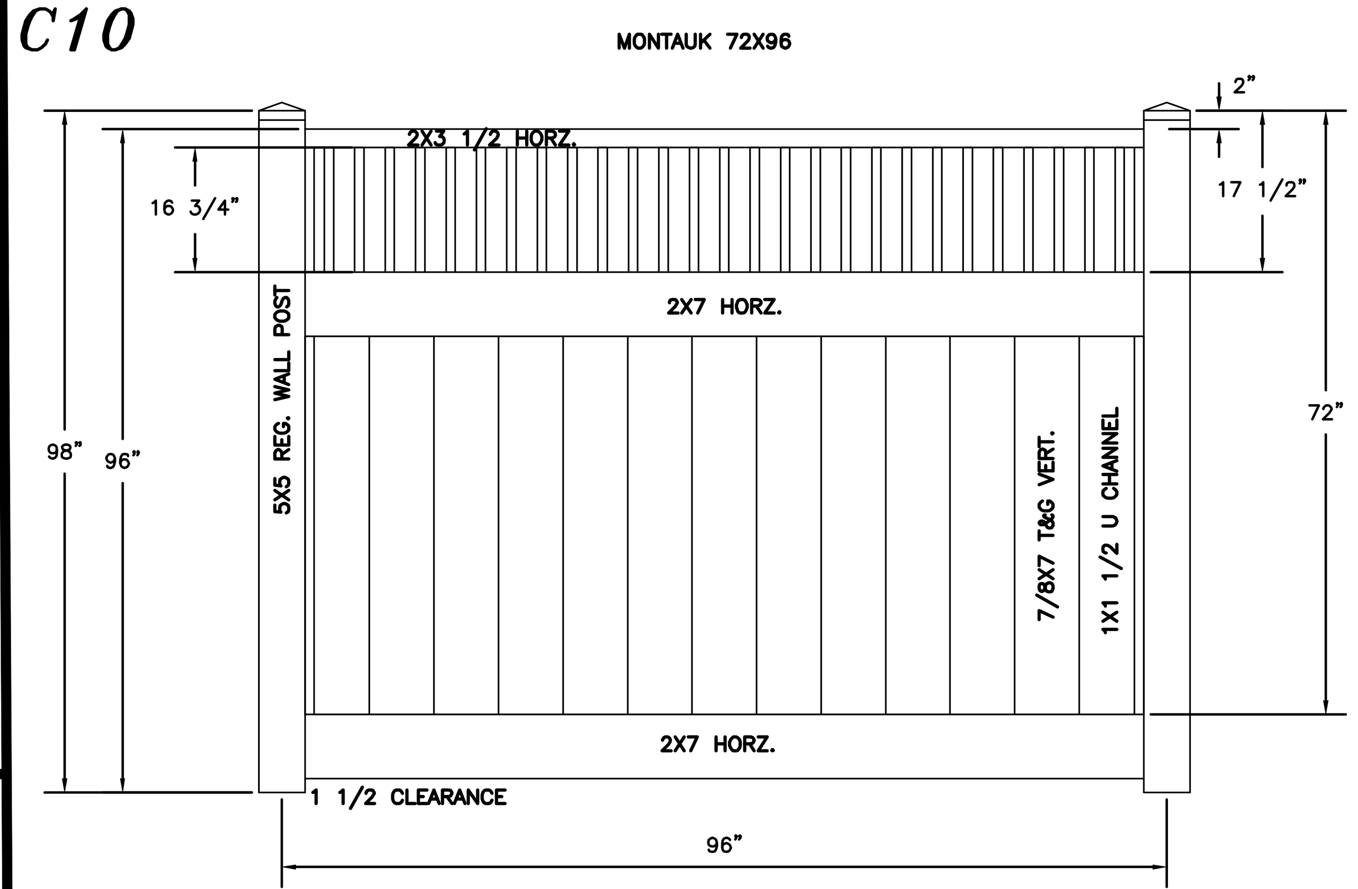


*VINYL FENCE DETAIL*
*N.T.S.*

## C11

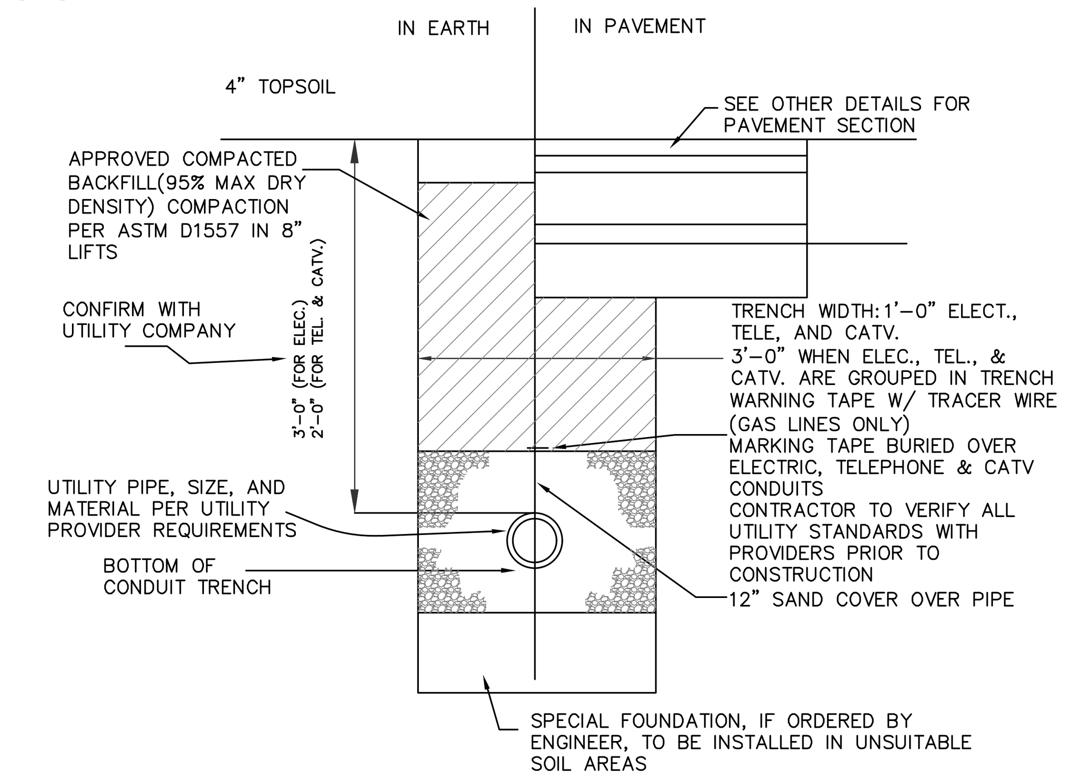


*ELECTRICAL, TELEPHONE, CABLE TRENCH*
NOT TO SCALE

## C12

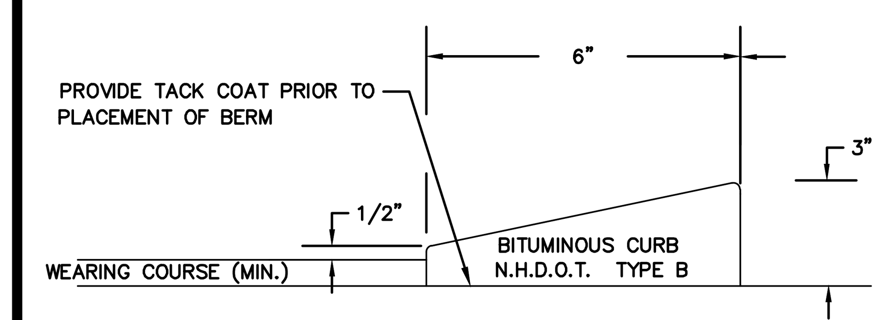


*MODIFIED CAPE COD BERM*
NOT TO SCALE

NOTES:

1.) CONTRACTOR MAY USE SLOPED GRANITE CURB

| REVISION | DATE | DESCRIPTION |
|---|---|---|
| #1 | 4-16-18 | REVISED PER TRC COMMENTS OF 4-5-18 |

DOVER FILE #P18-07

## C13

CROSS SECTION NOTES

1. ALL ROADWAY FILL TO BRING ROAD TO SUBGRADE SHALL BE INSTALLED IN LIFTS NO GREATER THAN 12".

2. ALL FILL SHALL BE COMPACTED TO 95% MINIMUM. COMPACTION TESTS TO BE CONDUCTED AT THE START OF THE PROJECT AND NO FURTHER THAN 100 FEET APART.

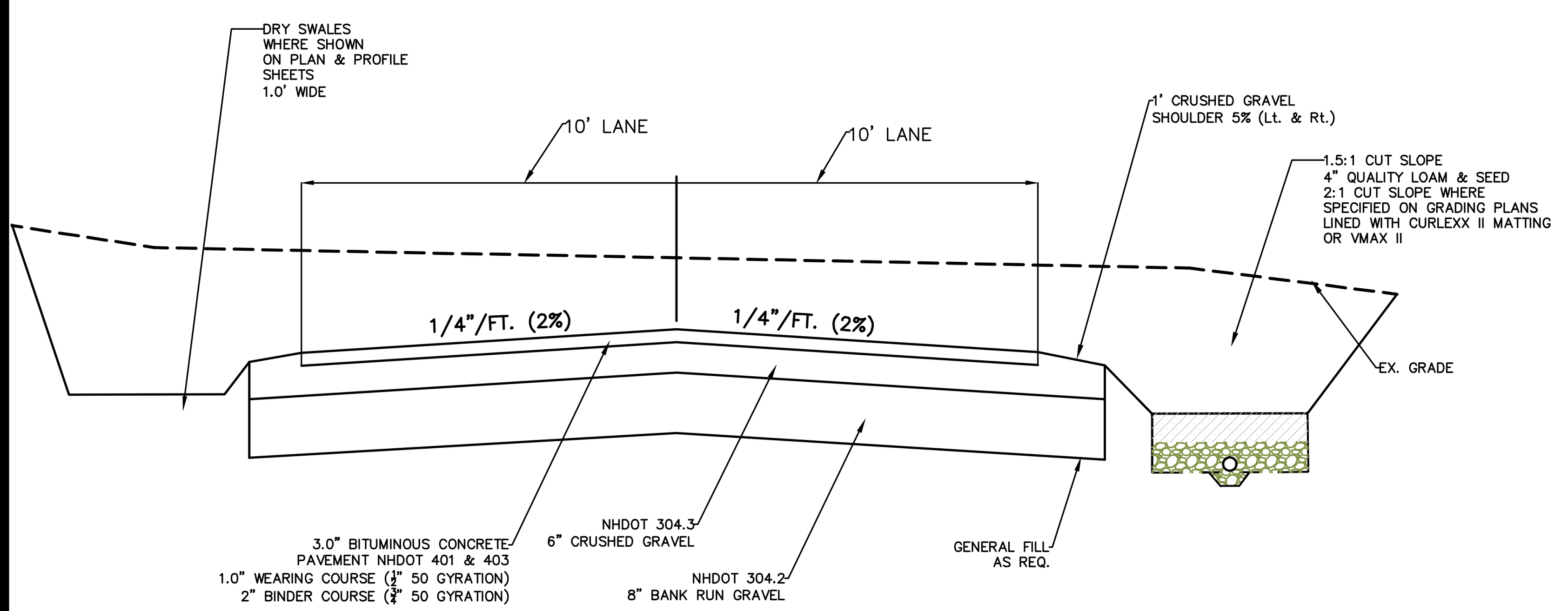


TYPICAL ROADWAY SECTION CARMENS DRIVE

COMPACTED SUBGRADE – CONTRACTOR SHALL SCARIFY SUBGRADE TO A DEPTH OF 30 INCHES BELOW F-GRADE. ALL STONES GREATER THAN 6" IN DIAMETER SHALL BE REMOVED FROM THE SCARIFIED LAYER. ANY IMPORTED FILL SHALL BE FREE OF ORGANICS AND FROST AND SHALL HAVE NO ROCKS LARGER THAN 6" IN DIAMETER. FILL MATERIAL SHALL BE APPROVED BY THE CITY'S AGENT AND/OR THE CITY'S ENGINEER.

## C14

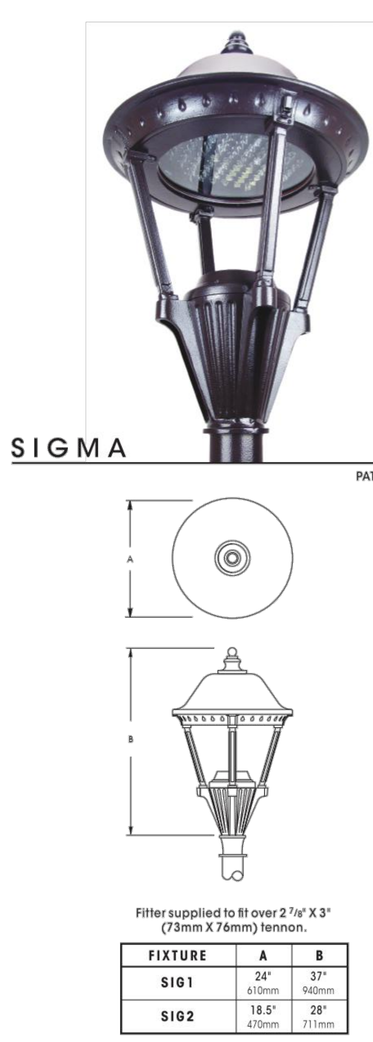

SOLID STATE AREA LIGHTING

PROJECT NAME:

FIXTURE TYPE:

SIGMA SERIES-LED

SPECIFICATIONS

HOUSING
Heavy cast low copper aluminum assembly (A356 alloy, <0.2% copper). Minimum wall thickness is .188". Traditional styling of the housing provided with cast aluminum housing top hinges for easy access.

VLED® OPTICAL MODULE
Low copper A356 alloy (<.2% copper) cast aluminum housing. Integrated clear tempered 3/16" glass lens sealed with a continuous silicone gasket protects emitters (LED's) and emitter Reflector-Prism optics, and seals the module from water intrusion and environmental contaminants. LED's are available in standard Neutral White (4000K), or optional Cool White (5000K) or Warm White (3000K). Each emitter is optically controlled by a Reflector-Prism injection molded from H12 acrylic (3 types per module; one from 0° - 50°; one from 50° - 65°; one from 65° - 72°). Each Reflector-Prism has indexing pins for aiming and is secured to an optical plate made of matte black anodized aluminum. The optical plate locates every Reflector-Prism over an emitter. Reflector-Prisms are secured to the optical plate with a UV curing adhesive. The Reflector-Prisms are arrayed to produce IES Type II, III, IV, and V-SQ distributions. The entire Optical Module is field rotatable in 90° increments. Both module and drivers are factory wired using water resistant, insulated cord. Lens, module and drivers are field replaceable.

LED EMITTERS
High Output LED's are driven at 350mA for nominal 1 Watt output each. LED's are available in standard Neutral White (4000K), or optional Cool White (5000K) or Warm White (3000K). Consult Factory for other LED options.

LED DRIVER
UL and CUL recognized High Power Factor, Constant Current LED drivers operate on input voltages from 120-277VAC, 50/60hz. Consult Factory for 347-480VAC. Driver is mechanically fastened to a retaining bracket. Main power quick disconnect provided. Driver has a minimum 4KV of internal surge protection. 10KV & 20KV Surge Protector optional. Dimming and High-Low Driver options available.

FINISH
Electrostatically applied TGIC Polyester Powder Coat on substrate prepared with 20 PSI power wash at 140°F. Four step iron phosphate pretreatment for protection and paint adhesion. 400°F bake for maximum hardness and durability. Texture finish is standard.

SIGMA

PATENT PENDING

Fitter supplied to fit over 2 7/8" X 3" (73mm X 76mm) tennon.

| FIXTURE | A | B |
|---|---|---|
| SIG1 | 24" 610mm | 37" 940mm |
| SIG2 | 18.5" 470mm | 28" 711mm |

U.L. Listed for wet location — MADE IN THE USA — 2016019

Sun Valley Lighting — 660 West Avenue O, Palmdale, CA 93551 Phone (661) 233-2000 Fax (661) 233-2001 www.usaltg.com — SUN VALLEY LIGHTING

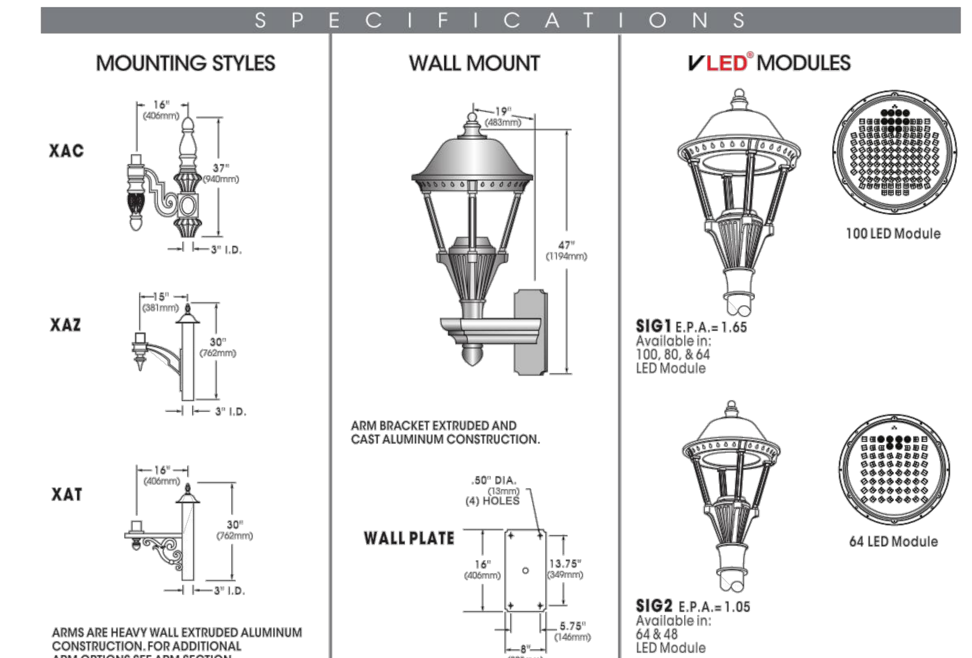

SIGMA SERIES - LED

SPECIFICATIONS

MOUNTING STYLES: XAC, XAZ, XAT

ARMS ARE HEAVY WALL EXTRUDED ALUMINUM CONSTRUCTION. FOR ADDITIONAL ARM OPTIONS SEE ARM SECTION.

WALL MOUNT: ARM BRACKET EXTRUDED AND CAST ALUMINUM CONSTRUCTION. WALL PLATE .50" DIA. (13mm) (4) HOLES

VLED® MODULES: 100 LED Module; SIG1 E.P.A.=1.65 Available in: 100, 80, & 64 LED Module; 64 LED Module; SIG2 E.P.A.=1.05 Available in: 64 & 48 LED Module

ORDERING INFORMATION

| LUMINAIRE | OPTICS | LED | MOUNTING | FINISH | OPTIONS |
|---|---|---|---|---|---|
| ☐ SIG1<br>☐ SIG2 | VLED® IES DISTRIBUTION TYPE:<br>☐ VLED - II (Type-II)<br>☐ VLED - III (Type-III)<br>☐ VLED - IV (Type-IV)<br>☐ VLED - VSQ (Type-VSQ) | No. LEDs — SIG1: ☐ 100LED (110 Watts) ☐ 80LED (89 Watts) ☐ 64LED (72 Watts); SIG2: ☐ 64LED (72 Watts) ☐ 48LED (53 Watts). Wattages are Max Input Watts.<br>COLOR: ☐ NW (4000K)* *STANDARD ☐ CW (5000K) ☐ WW (3000K) OTHER LED COLORS AVAILABLE CONSULT FACTORY<br>VOLTAGE: ☐ 120 ☐ 208 ☐ 240 ☐ 277 ☐ 347 ☐ 480 | ARM MOUNT: ☐ PT ☐ 1 ☐ 2-180 ☐ 2-90 ☐ 3-90 ☐ 3-120 ☐ 4-90<br>WALL MOUNT: ☐ WM<br>SEE SUN VALLEY CATALOG FOR ADDITIONAL ARMS | STANDARD TEXTURED FINISH: ☐ BLACK RAL-9005-T ☐ WHITE RAL-9003-T ☐ GREY RAL-7004-T ☐ DARK BRONZE RAL-8019-T ☐ GREEN RAL-6005-T<br>FOR SMOOTH FINISH REMOVE SUFFIX "T" (EXAMPLE: RAL-9500)<br>SEE USALTG.COM FOR ADDITIONAL COLORS | ☐ INTERNAL HOUSE SIDE SHIELDS... HS<br>☐ EXTERNAL HOUSE SIDE SHIELD... EHS<br>☐ DIMMABLE DRIVER(S) (0-10V)... DIM<br>☐ HIGH-LOW DIMMING FOR HARDWIRED SWITCHING OR NON-INTEGRATED MOTION SENSOR... HLSW<br>☐ PHOTO CELL + VOLTAGE (EXAMPLE: PC120V)... PC+V<br>☐ 10KV SURGE PROTECTOR... 10SP<br>☐ 20KV SURGE PROTECTOR (277V & 480V Only)... 20SP |

Sun Valley Lighting — 660 West Avenue O, Palmdale, CA 93551 Phone (661) 233-2000 Fax (661) 233-2001 www.usaltg.com — SUN VALLEY LIGHTING

CONSTRUCTION DETAILS
COMPOSITE DETAILS
RESIDENTIAL SUBDIVISION REVIEW
LAND OF
TDAK & COMPANY LLC
99 SIXTH STREET
DOVER, N.H.
***TAX MAP 35, LOT 57***

## C15

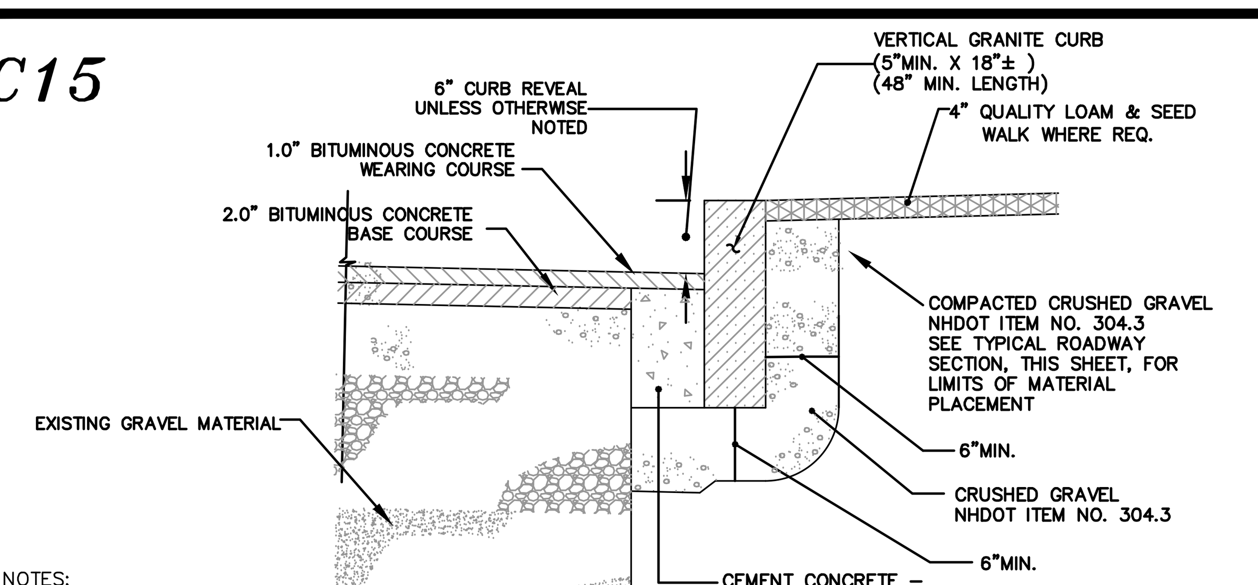


NOTES:

1.) TO BE USED IN RIGHT OF WAY TO REPLACE AT ENTRANCE

*VERTICAL GRANITE CURB DETAIL*
NOT TO SCALE

## C16

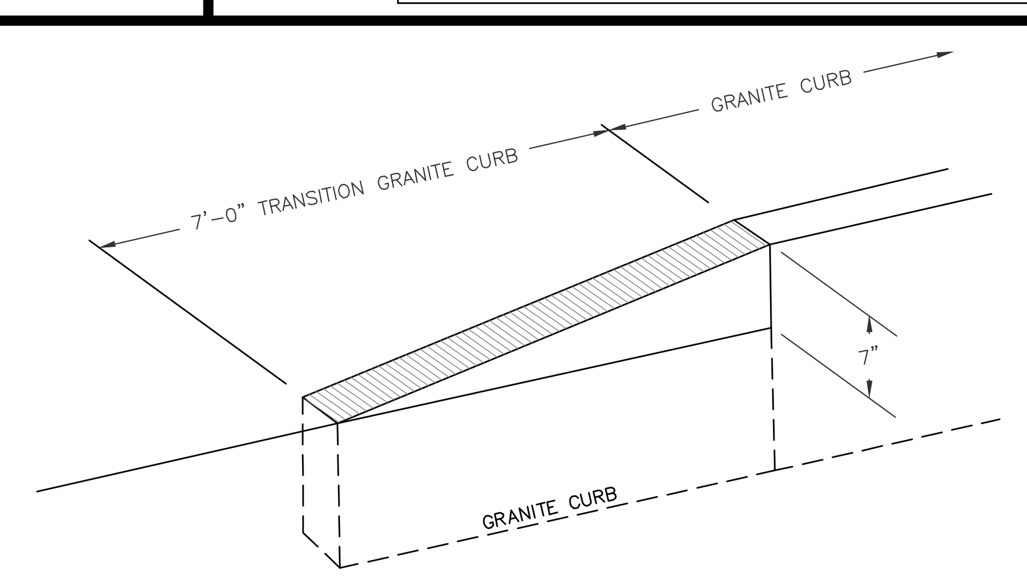


*CURB TRANSITION DETAIL*
NOT TO SCALE

TO BE USED FOR TRANSITION FROM GRANITE CURB TO EDGE OF PAVEMENT

## C17

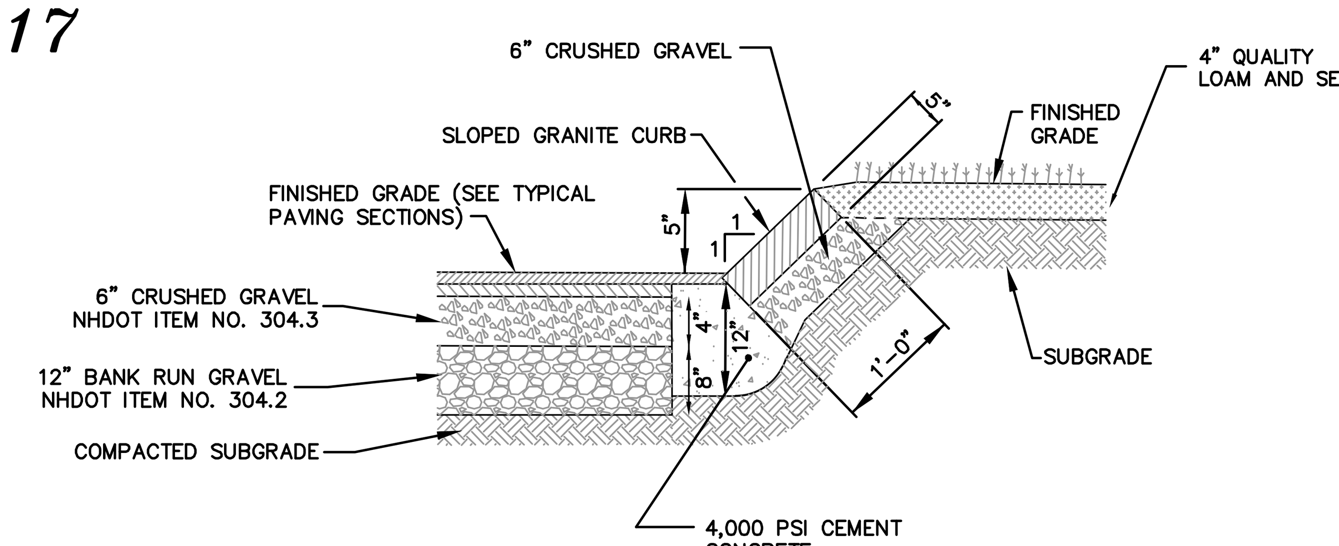


*SLOPE GRANITE CURB DETAIL*
NOT TO SCALE

BERRY SURVEYING & ENGINEERING
335 SECOND CROWN POINT ROAD
BARRINGTON, NH 03825 (603)332-2863

SCALE: AS NOTED
DATE : MARCH 28, 2018
FILE NO. : DB 2017-060

STATE OF NEW HAMPSHIRE – KENNETH A. BERRY No. 14243 – LICENSED PROFESSIONAL ENGINEER

C-102

SHEET 18 OF 22

## U1

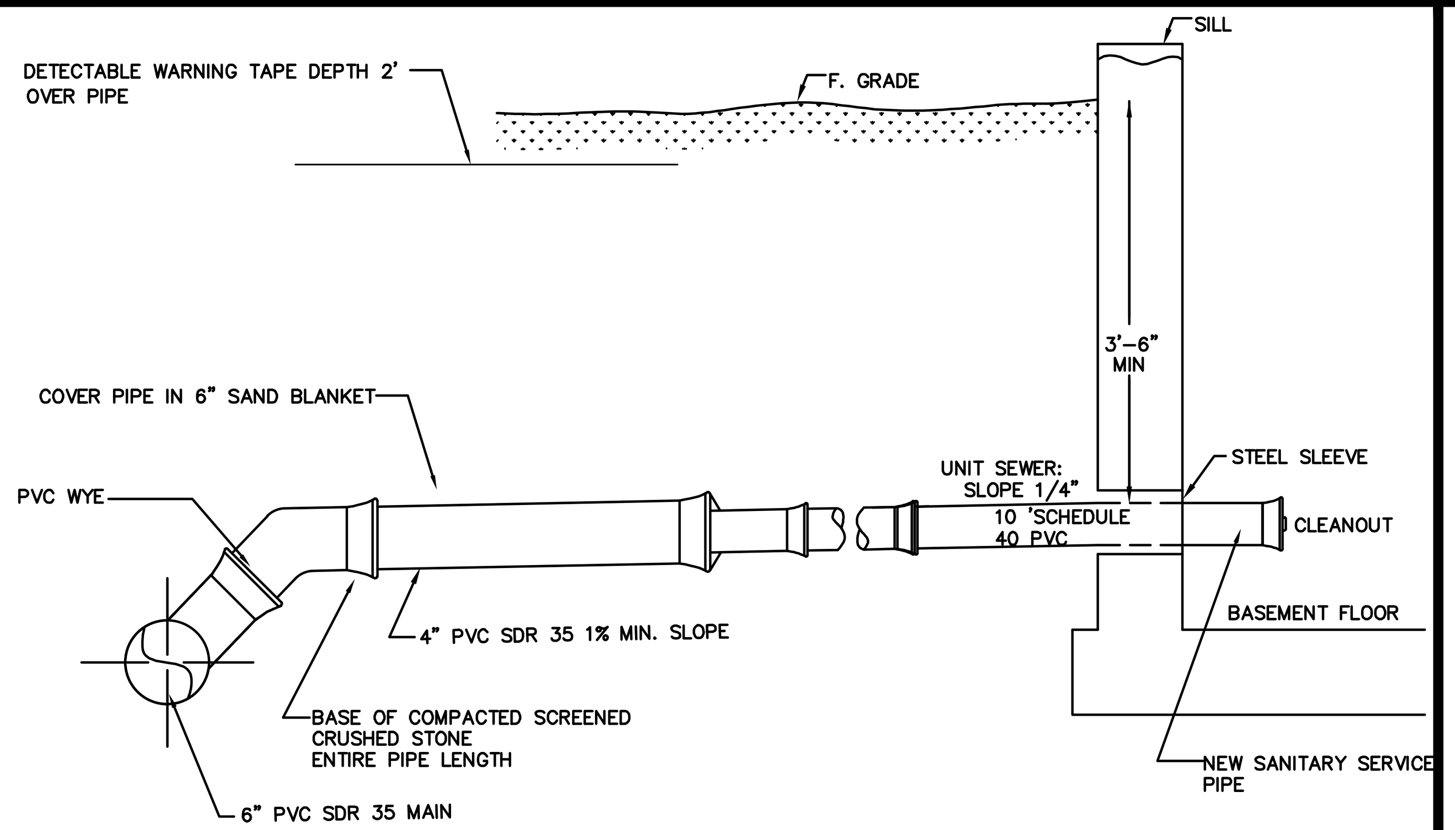


1.) SEE DETAILS FOR SERVICE CONNECTION REQUIREMENTS

2.) SERVICE CONNECTION SHALL BE INSTALLED BELOW WATER MAIN WHERE POSSIBLE.

3.) CLEANOUTS SHALL BE INSTALLED INSIDE EACH BUILDING EXIT POINT

***DETAIL OF UNIT SEWER SERVICE***

NOT TO SCALE

## U2

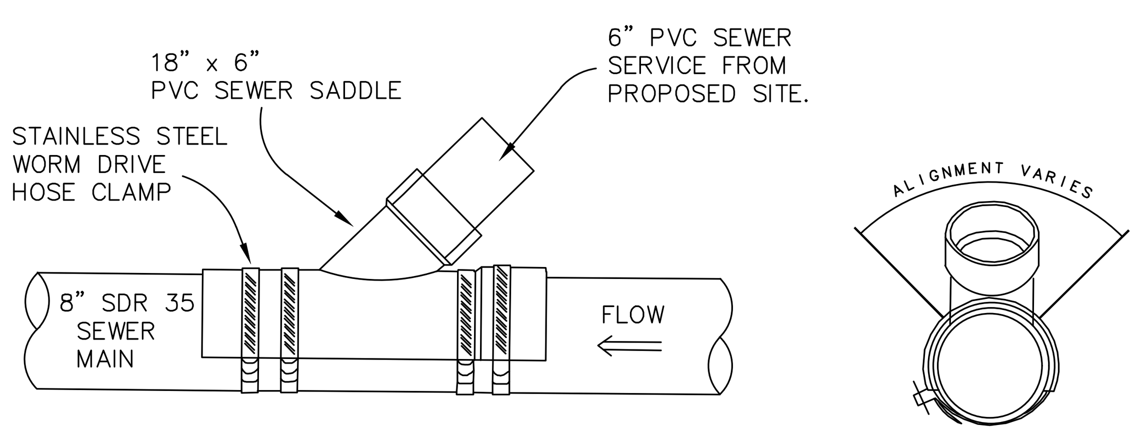


***SEWER SADDLE DETAIL***

NOT TO SCALE

## U3

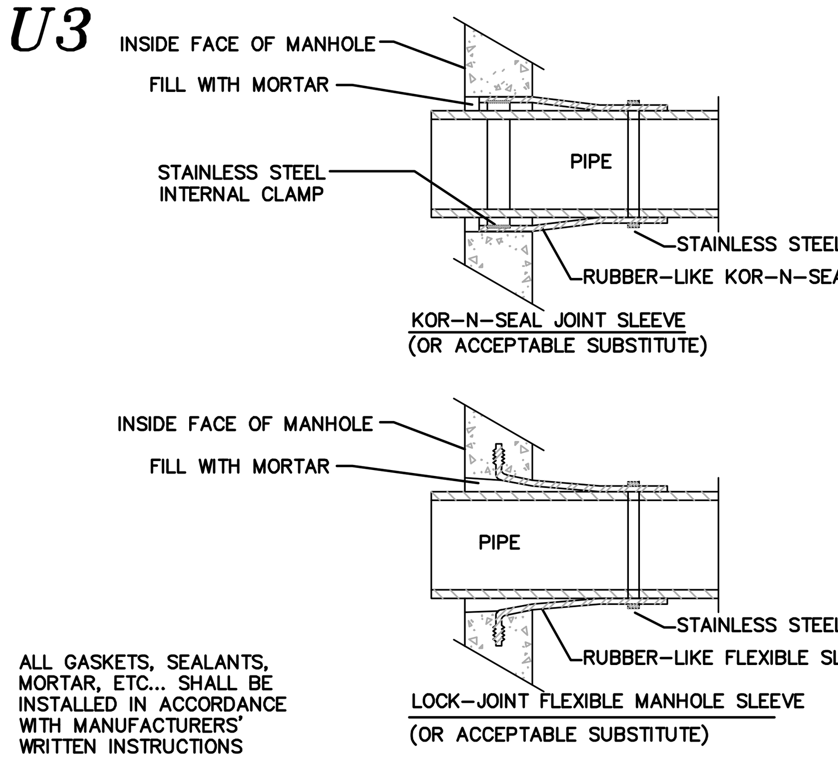


ALL GASKETS, SEALANTS, MORTAR, ETC... SHALL BE INSTALLED IN ACCORDANCE WITH MANUFACTURERS' WRITTEN INSTRUCTIONS

***DETAIL "A" – PIPE TO MANHOLE JOINTS***

NOT TO SCALE

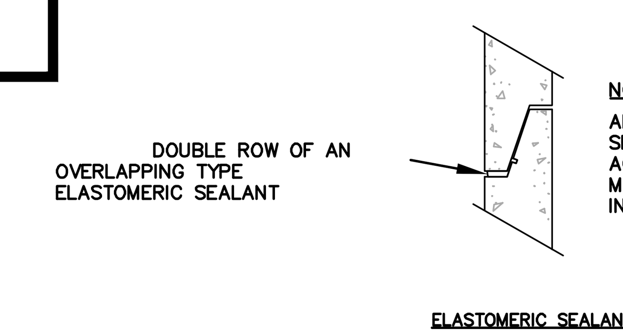


NOTE:

ALL GASKETS AND SEALANTS SHALL BE INSTALLED IN ACCORDANCE WITH MANUFACTURERS' WRITTEN INSTRUCTIONS.

***DETAIL "B" HORIZONTAL JOINTS***

NOT TO SCALE

## U4

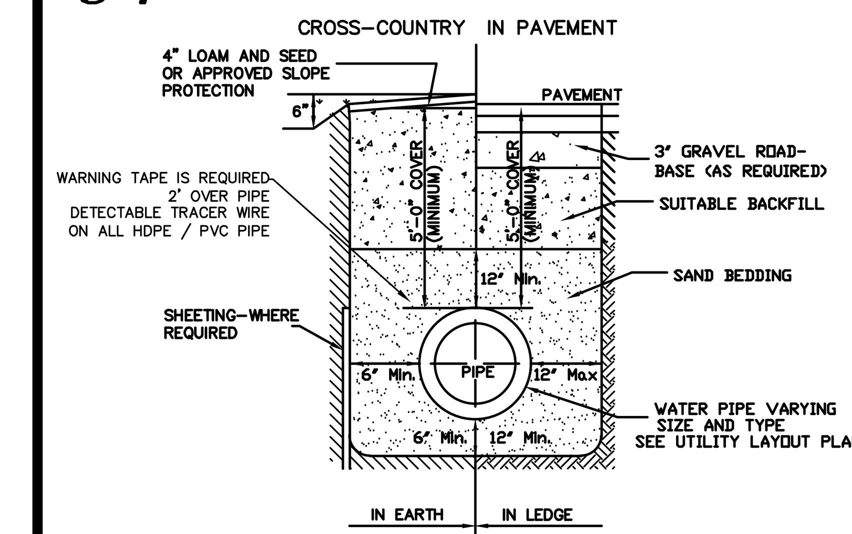


***TYPICAL TRENCH DETAIL FOR WATER SYSTEM***

NOT TO SCALE

## U5

NOTES ON MANHOLE CONSTRUCTION:

1) IT IS THE INTENTION THAT THE MANHOLE, INCLUDING ALL COMPONENT PARTS, HAVE ADEQUATE SPACE, STRENGTH AND LEAKPROOF QUALITIES CONSIDERED NECESSARY FOR THE INTENDED SERVICE. SPACE REQUIREMENTS AND CONFIGURATIONS, SHALL BE AS SHOWN ON THE DRAWING. MANHOLES SHALL BE AN ASSEMBLY OF PRECAST SECTIONS, WITH STEEL REINFORCEMENT AND ADEQUATE JOINTING. THE COMPLETE STRUCTURE SHALL BE OF SUCH MATERIAL AND QUALITY AS TO WITHSTAND HS-20-44 LOADING, INCLUDING THE COVER. ALL SMH CONSTRUCTION AND MATERIALS WILL BE IAW ENV.-WQ 704.13 ADOPTED OCTOBER 15, 2014

2) BARRELS AND CONE SECTIONS SHALL BE PRECAST REINFORCED CONCRETE. (IAW ENV.-WQ 704.12 (d))

3) SEWER MANHOLE DIAMETER SHALL BE AS INDICATED ON THE PLANS.

4) PRECAST CONCRETE BARREL SECTIONS, CONES AND BASES SHALL CONFORM TO ASTM C478.

5) GRAVITY SEWER PIPE TESTING WILL BE IN ACCORDANCE WITH ENV.-WQ 704.06 AND MAN HOLE TESTING IAW ENV.-WQ 704.17 DATED OCTOBER 15, 2014.

6) INVERTS AND SHELVES: MANHOLES SHALL HAVE A BRICK PAVED SHELF AND INVERT, CONSTRUCTED TO CONFORM TO THE SIZE OF THE PIPE AND FLOW. INVERT BRICKS SHALL BE LAID ON EDGE AND THE BASE SECTION SHALL BE FULL. AT CHANGES IN DIRECTIONS, THE INVERTS SHALL BE LAID OUT IN CURVES OF THE LONGEST RADIUS POSSIBLE TANGENT TO THE CENTER LINE OF THE SEWER PIPES. CARE SHALL BE TAKEN TO ENSURE THAT THE BRICK INVERT IS A SMOOTH CONTINUATION OF THE SEWER INVERT. SHELVES SHALL BE CONSTRUCTED TO THE ELEVATION OF THE HIGHEST PIPE CROWN AND SLOPE TO DRAIN TOWARD THE FLOWING THROUGH CHANNEL. UNDERLAYMENT OF INVERT AND SHELF SHALL CONSIST OF BRICK MASONRY. (IAW ENV.-WQ 704.13 (a) (9)), MORTAR SHALL CONFORM WITH REQUIREMENTS OF IAW ENV.-WQ 704.13 (c).

7) FRAMES AND COVERS: MANHOLES FRAMES AND COVERS SHALL BE OF HEAVY DUTY DESIGN AND PROVIDE A 30-INCH CLEAR OPENING. 3-INCH (MINIMUM HEIGHT) LETTERS WITH THE WORD "SEWER" SHALL BE PLAINLY CAST INTO THE CENTER OF EACH MANHOLE COVER. (IAW ENV.-WQ 704.13 (a) (4-6)) SEWER MAN HOLE COVERS ARE TO PAMREX.

8) SHALLOW MANHOLE: IN LIEU OF A CONE SECTION, WHEN MANHOLE DEPTH IS LESS THAN 6 FEET, A REINFORCED CONCRETE SLAB COVER MAY BE USED HAVING AN ECCENTRIC ENTRANCE OPENING AND CAPABLE OF SUPPORTING H-20 LOADS.

9) HORIZONTAL JOINTS BETWEEN SECTIONS OF PRECAST CONCRETE BARRELS SHALL BE OF A TYPE APPROVED BY THE DOVER DPW, WHICH TYPE SHALL, IN GENERAL, DEPEND FOR WATERTIGHTNESS UPON A DOUBLE ROW OF AN OVERLAPPING TYPE ELASTOMERIC OR MASTIC-LIKE GASKET. APPROVED ELASTOMERIC SEALANTS ARE: RAM-NEK, KENT SEAL NO. 2, EZ, OR EQUAL.

10) IN CROSS COUNTRY AREAS OUTSIDE OF THE PAVED ROADWAY SURFACE, THE MANHOLE FRAME ELEVATION SHALL BE A MINIMUM OF 6" ABOVE FINISHED GRADE. GRADE TO PROVIDE POSITIVE DRAINAGE AWAY FROM THE MANHOLE. SEE TYPICAL TRENCH DETAIL ON SHEET D-102.

11.) ALL FRAMES AND GRATES ARE TO BE U.S.A. MADE. MANHOLE STEPS ARE REQUIRED IN THIS MUNICIPALITY AND MUST CONFORM TO THE REQUIREMENTS OF ENV-WQ 704.14.

12.) THE CONTRACTOR TO WORK WITH CITY OF DOVER REVIEW ENGINEER AND SEWER DEPARTMENT ON THE MEANS AND METHODS USED TO INSTALL ALL SEWER STRUCTURES. SPECIFIC ATTENTION IS TO BE PAID TO THE INSTALLATION OF SMH 1A, WHEREAS THE EXISTING PIPE SLOPE IS UNKNOWN. DURING LOW FLOW CONDITIONS, CUT AND TEMPORARILY CAP THE EXISTING 8" VC LINE, OR INSTALL TEMPORARY BY-PASS LINE (OF EQUAL SIZE). AFTER INSTALLATION OF NEW BASIN, FERNCO THE NEW SDR 35 PIPES TO THE EXISTING VC LINES. THIS INSTALLATION IS TO BE COORDINATED WITH THE CITY OF DOVER SEWER DEPARTMENT.

13.) ANY WORK INVOLVING THE CUTTING INTO THE EXISTING A.C. PIPE SHALL MEET THE REQUIREMENTS OF ENV-A 1800.

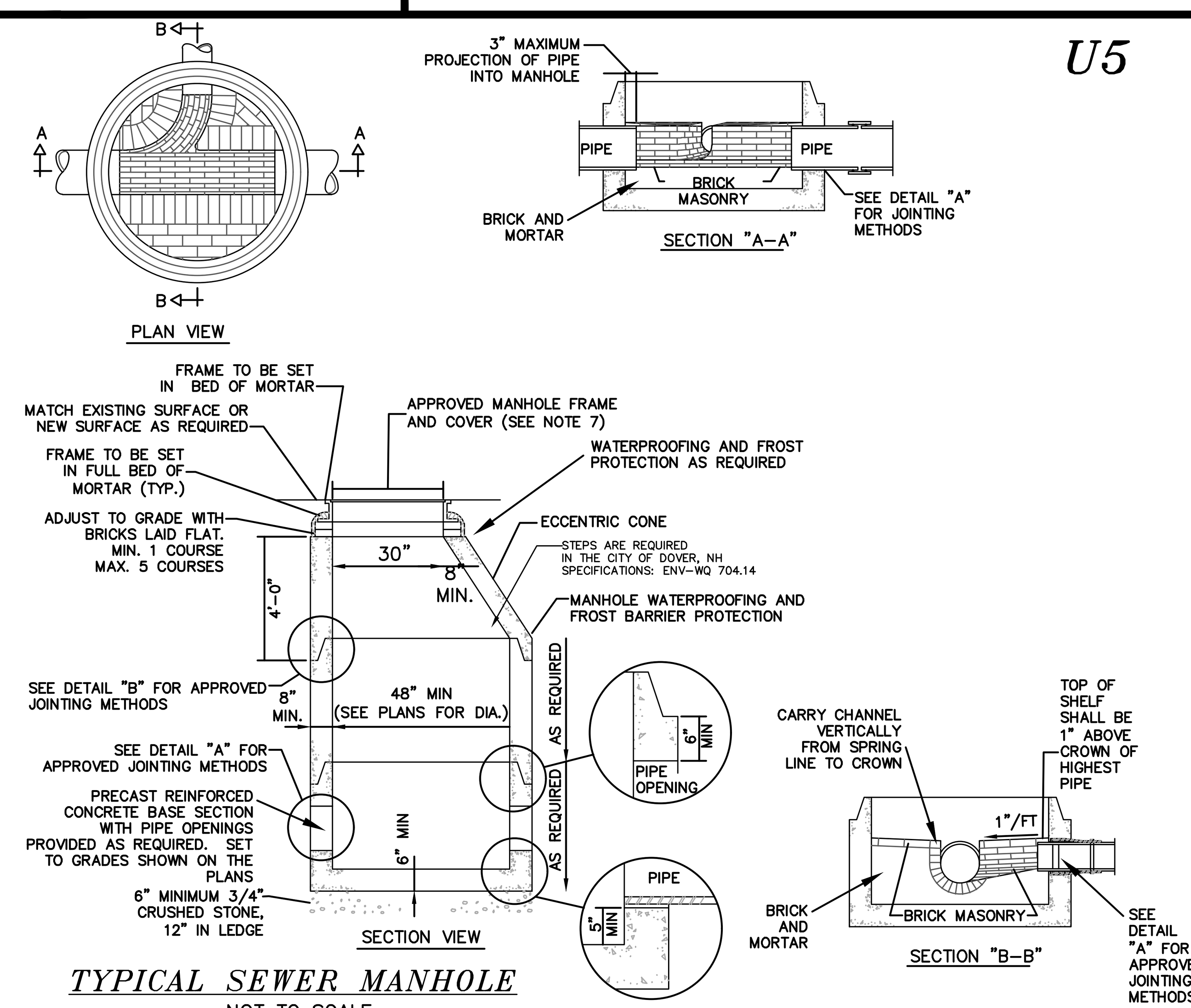


***TYPICAL SEWER MANHOLE***

NOT TO SCALE

## U6

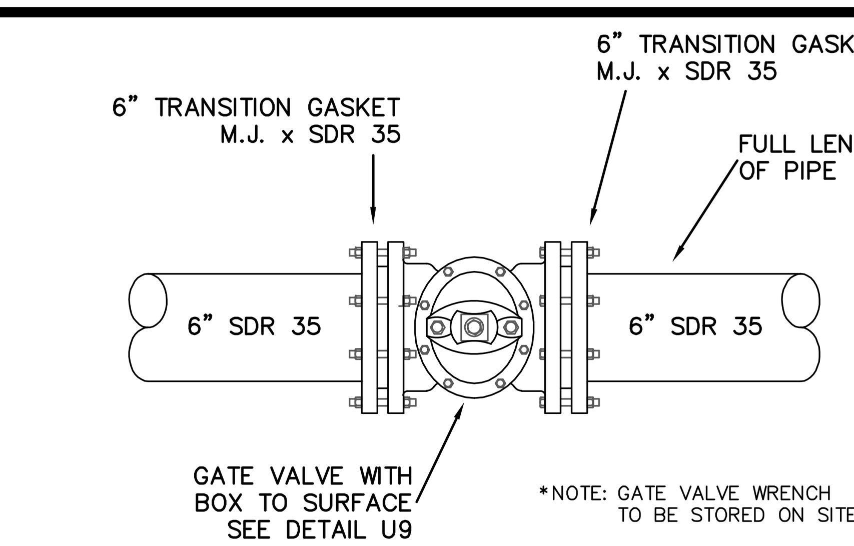


*NOTE: GATE VALVE WRENCH TO BE STORED ON SITE

***SHUTOFF VALVE DETAIL***

NOT TO SCALE

## U7

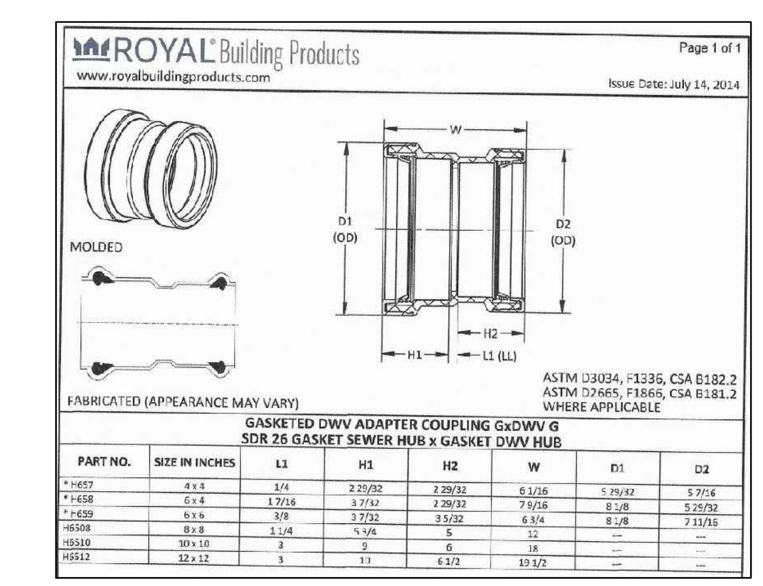

ROYAL Building Products

www.royalbuildingproducts.com

Page 1 of 1

Issue Date: July 14, 2014



ASTM D3034, F1336, CSA B182.2
ASTM D2665, F1866, CSA B181.2
WHERE APPLICABLE

GASKETED DWV ADAPTER COUPLING GxDWV G
SDR 26 GASKET SEWER HUB x GASKET DWV HUB

| PART NO. | SIZE IN INCHES | L1 | H1 | H2 | W | D1 | D2 |
|---|---|---|---|---|---|---|---|
| * H657 | 4 x 4 | 1/4 | 2 29/32 | 2 29/32 | 6 1/16 | 5 29/32 | 5 7/16 |
| * H658 | 6 x 4 | 1 7/16 | 3 7/32 | 2 29/32 | 7 9/16 | 8 1/8 | 5 29/32 |
| * H659 | 6 x 6 | 3/8 | 3 7/32 | 3 5/32 | 6 3/4 | 8 1/8 | 7 11/16 |
| H6508 | 8 x 8 | 1 1/4 | 5 3/4 | 5 | 12 | — | — |
| H6510 | 10 x 10 | 3 | 9 | 6 | 18 | — | — |
| H6512 | 12 x 12 | 3 | 13 | 6 1/2 | 19 1/2 | — | — |

***COUPLING DETAIL***

## U8

SEE ALSO TYPICAL SEWER AND DRAINAGE TRENCH DETAIL, SHEET U-102, DETAIL U13

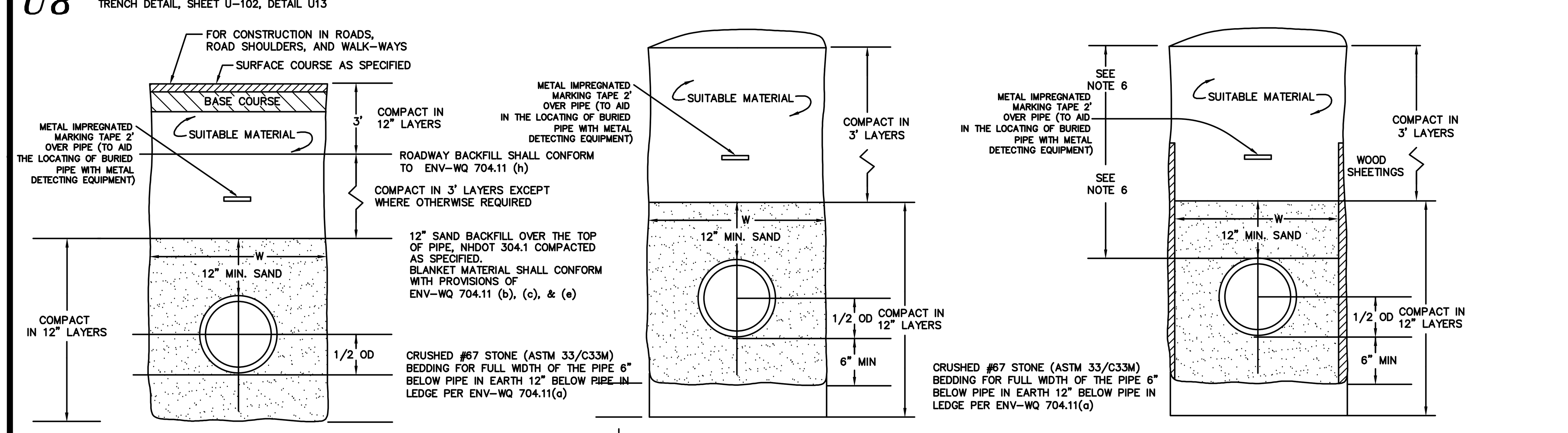


***LEDGE CONSTRUCTION***

NOT TO SCALE

***EARTH CONSTRUCTION***

NOT TO SCALE

***EARTH CONSTRUCTION WITH SHEETING***

NOT TO SCALE

## U9

SEPERATION NOTES:

1. WATER MAIN SHALL BE IN ACCORDANCE WITH THE "RECOMMENDED STANDARDS FOR WATER WORKS" SO-CALLED TEN STATE STANDARDS AND NEW HAMPSHIRE WATER SUPPLY AND POLLUTION CONTROL DESIGN STANDARDS.

2. WATER MAINS SHALL BE LAID AT LEAST 10 FEET HORIZONTALLY FROM ANY EXISTING OR PROPOSED SEWERS. THE DISTANCE SHALL BE MEASURED EDGE TO EDGE. IF THIS DISTANCE CANNOT BE OBTAINED, THEN THE PIPES SHALL BE INSTALLED IN A SEPERATE TRENCH AT AN ELEVATION SO THE BOTTOM OF THE WATER MAIN IS AT LEAST 18 INCHES ABOVE THE TOP OF THE SEWER.

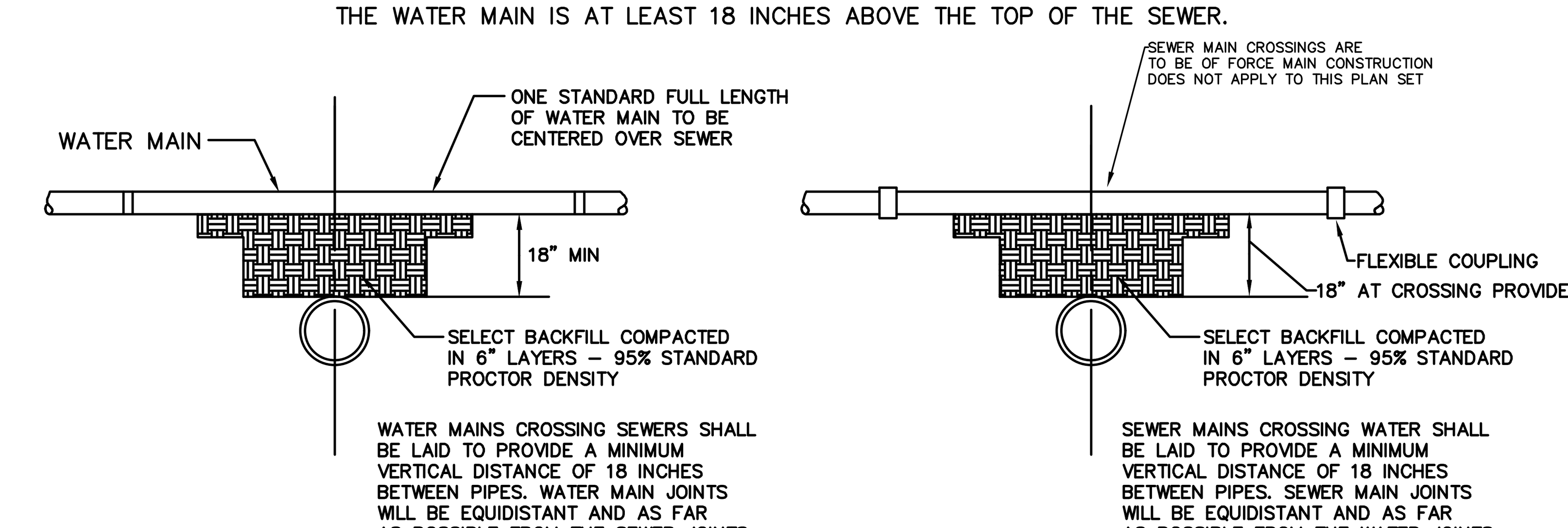


WATER MAINS CROSSING SEWERS SHALL BE LAID TO PROVIDE A MINIMUM VERTICAL DISTANCE OF 18 INCHES BETWEEN PIPES. WATER MAIN JOINTS WILL BE EQUIDISTANT AND AS FAR AS POSSIBLE FROM THE SEWER JOINTS

WATER MAIN ABOVE SEWER

SEWER MAINS CROSSING WATER SHALL BE LAID TO PROVIDE A MINIMUM VERTICAL DISTANCE OF 18 INCHES BETWEEN PIPES. SEWER MAIN JOINTS WILL BE EQUIDISTANT AND AS FAR AS POSSIBLE FROM THE WATER JOINTS

WATER MAIN BELOW SEWER

***TYPICAL WATER/SEWER SEPERATION DETAILS***

NOT TO SCALE

DOVER FILE #P18-07

| REVISION | DATE | DESCRIPTION |
|---|---|---|
| #1 | 4-16-18 | REVISED PER TRC COMMENTS OF 4-5-18 |

UTILITY DETAILS

COMPOSITE DETAILS

RESIDENTIAL SUBDIVISION REVIEW
LAND OF
TDAK & COMPANY LLC
99 SIXTH STREET
DOVER, N.H.
***TAX MAP 35, LOT 57***


BERRY SURVEYING & ENGINEERING
335 SECOND CROWN POINT ROAD
BARRINGTON, NH 03825 (603)332-2863


SCALE : AS SHOWN
DATE : MARCH 28, 2018
FILE NO. : DB 2017-060

STATE OF NEW HAMPSHIRE – KENNETH A. BERRY No. 14247 LICENSED – PROFESSIONAL ENGINEER

**U-101**

## U10

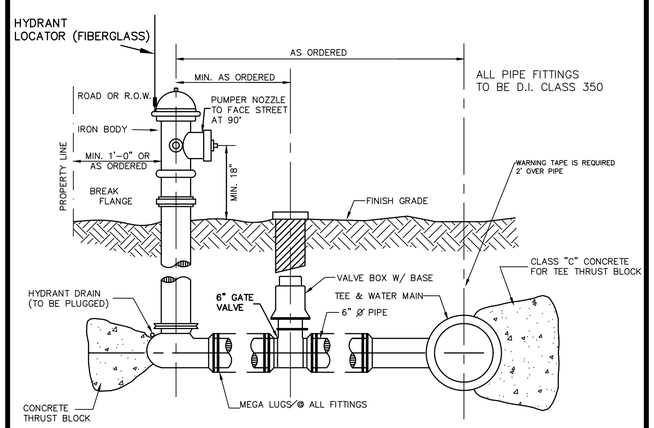


1.) THE FIRE HYDRANT IS TO BE PAINTED CITY OF DOVER STANDARD COLORS AND BE EQUIPPED WITH A HYDRANT LOCATOR.
2.) THE FIRE HYDRANT SHALL BE THE "KENNEDY" TYPE OR APPROVED EQUAL.
3.) K81A HYDRANTS AND GATE VALVES OPEN RIGHT

HYDRANT INSTALLATION DETAIL

## U11

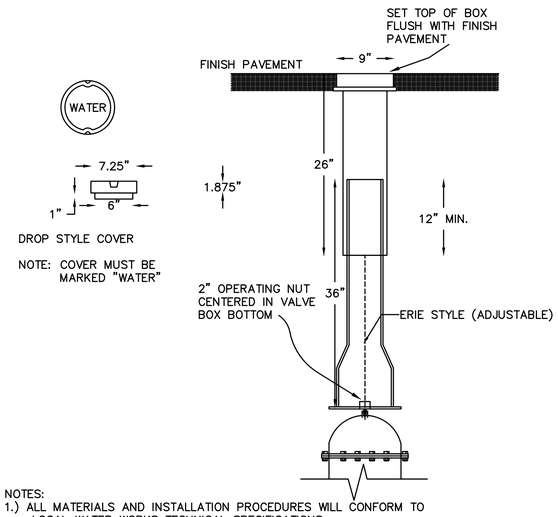


NOTES:
1.) ALL MATERIALS AND INSTALLATION PROCEDURES WILL CONFORM TO LOCAL WATER WORKS TECHNICAL SPECIFICATIONS.
2.) ALL PIPE SHOULD HAVE A MINIMUM DEPTH OF 6' FROM TOP OF PIPE TO FINISH GRADE.

*VALVE BOX DETAIL*
NOT TO SCALE

## U12

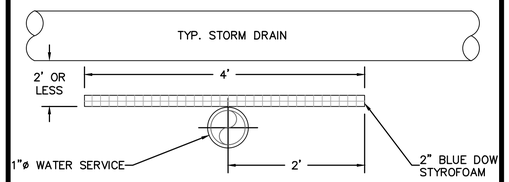


*INSULATE WATER PIPE WHERE CROSSING UNDER CULVERT*
NOT TO SCALE

## U13

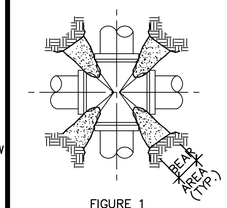


FIGURE 1
CROSS
(ONLY REQ'D IF ANY LEG IS LESS THAN 60 FT. LONG)

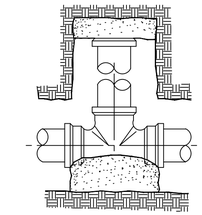

FIGURE 2
TEE, PLUG OR CAP

## U14

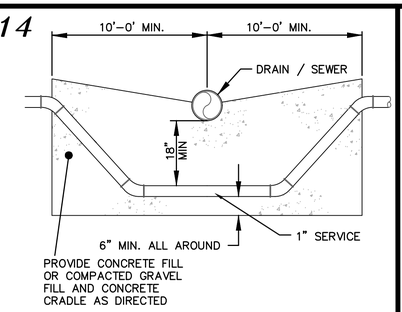


*WATER MAIN INSTALLATION – BELOW DRAIN / SEWER*
NOT TO SCALE

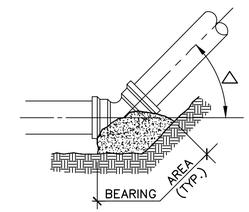


FIGURE 3
HORIZONTAL OR UPWARD VERTICAL BEND

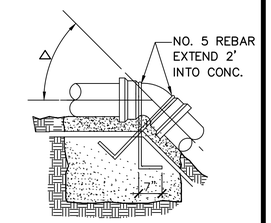


FIGURE 4
DOWNWARD VERTICAL BEND

*TYPICAL THRUST BLOCKS*
NOT TO SCALE

| PIPE I.D. | BEARING AREA, SQUARE FEET | | | | | | VOLUME OF CONC. CU.YD | | |
|---|---|---|---|---|---|---|---|---|---|
| | FIGURE 1 | FIGURE 2 | FIGURE 3, △ | | | | FIGURE 4, △ | | |
| | | | 90° | 45° | 22-1/2° | 11-1/4° | 45° | 22-1/2° | 11-1/4° |
| 4" | 2 | 2 | 2 | 1 | 1 | 1 | 1.0 | .5 | .5 |
| 6" | 2 | 3 | 3 | 2 | 1 | 1 | 1.5 | 1.0 | .5 |
| 8" | 2 | 5 | 6 | 3 | 2 | 1 | 2.0 | 1.0 | .5 |
| 10" | 3 | 7 | 10 | 5 | 3 | 1 | 4.0 | 2.0 | 1.0 |
| 12" | 3 | 10 | 14 | 8 | 4 | 2 | | | |
| 14" | 4 | 14 | 20 | 10 | 5 | 3 | | | |
| 16" | 4 | 20 | 24 | 12 | 7 | 4 | | | |
| 18" | 5 | 24 | 30 | 16 | 10 | 5 | | | |
| 20" | 5 | 28 | 40 | 20 | 12 | 6 | | | |

NOTE:
MECHANICAL JOINTS AT ALL FITTINGS IE: BENDS, TEES, CROSSES, AND VALVES SHALL BE THRUST RESTRAINT. (MEGA-LUG OR APPROVED EQUAL).

GENERAL NOTES:
1. ALL FITTINGS & EXPOSED REBAR TO BE WRAPPED W/ TWO LAYERS OF 6 MIL. POLYETHYLENE WHERE COVERED WITH CONCRETE.
2. ALL CONCRETE SHALL BE CLASS C 3000 P.S.I. MINIMUM 28 DAYS COMPRESSIVE STRENGTH.
3. PLACE CONCRETE AGAINST UNDISTURBED EARTH.
4. TABLE DENOTES MINIMUM BEARING AREA OR VOLUME OF THRUST BLOCK. SPECIAL DESIGN FOR EACH INSTALLATION IS REQUIRED IF ALLOWABLE SOIL BEARING CAPACITY IS LESS THAN 3000 P.S.F.
5. VERTICAL SURFACES NOT BEARING AGAINST UNDISTURBED EARTH SHALL BE FORMED.
6. KEEP CONCRETE AWAY FROM FLANGE BOLTS AND FITTINGS.

## U15

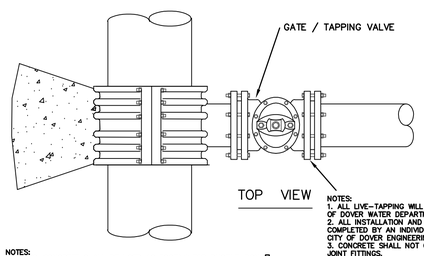


TOP VIEW

NOTES:
1. ALL LIVE-TAPPING WILL BE COMPLETED IN ACCORDANCE WITH CITY OF DOVER WATER DEPARTMENT REGULATIONS.
2. ALL INSTALLATION AND TAPPING OF EXISTING WATER MAINS WILL BE COMPLETED BY AN INDIVIDUAL OR FIRM THAT IS APPROVED BY THE CITY OF DOVER ENGINEERING
3. CONCRETE SHALL NOT CONTACT BOLTS OR END OF MECHANICAL JOINT FITTINGS.
4. SEE THRUST BLOCK TABLES FOR AREA OF CONCRETE REQUIREMENTS.

NOTES:
3000 PSI CONCRETE SHALL BE USED AS FOOTING FOR DUCTILE IRON PIPE.

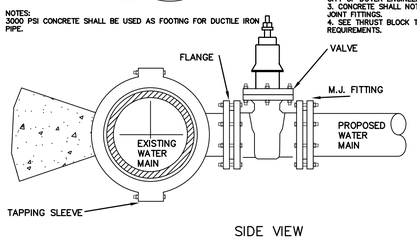


SIDE VIEW

*DETAIL FOR STANDARD TAPPING SLEEVE AND VALVE ASSEMBLY*
NOT TO SCALE

## U16

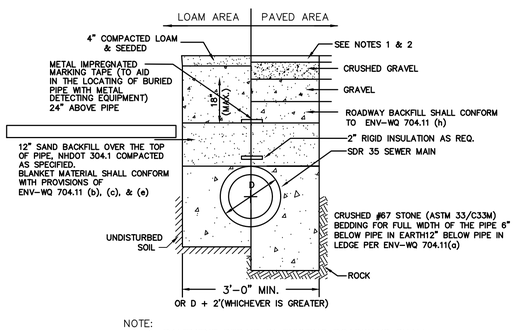


NOTE:
1. PAVEMENT REPAIR IN EXISTING ROADWAYS SHALL CONFORM TO STREET OPENING REGULATIONS.
2. NEW ROADWAY CONSTRUCTION SHALL CONFORM TO SUBDIVISION SPEC'S.
2. ANTI-SEEP COLLARS OR CLAY CHECK DAMS ON STEEP RUNS IN WET CONDITIONS

*TYPICAL DRAIN AND SEWER PIPE TRENCH*
NOT TO SCALE

## U17

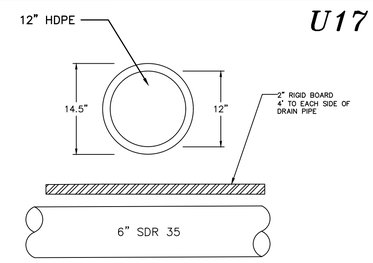


CROSS SECTION A-A

*SEWER AND DRAIN CROSSING*
NOT TO SCALE

## U18

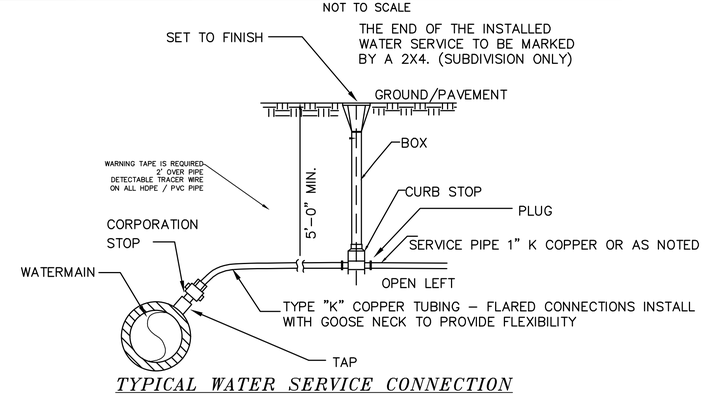


*TYPICAL WATER SERVICE CONNECTION*
NOT TO SCALE

U-102

DOVER FILE #P18-07

| REVISION | DATE | DESCRIPTION |
|---|---|---|
| #1 | 4-16-18 | REVISED PER TRC COMMENTS OF 4-5-18 |

UTILITY DETAILS
COMPOSITE DETAILS
RESIDENTIAL SUBDIVISION REVIEW
LAND OF
TDAK & COMPANY LLC
99 SIXTH STREET
DOVER, N.H.
*TAX MAP 36, LOT 57*


BERRY SURVEYING & ENGINEERING
335 SECOND CROWN POINT ROAD
BARRINGTON, NH 03825 (603)332-2863


SCALE : AS SHOWN
DATE : MARCH 28, 2018
FILE NO. : DB 2017-060

STATE OF NEW HAMPSHIRE – KENNETH A. BERRY No. 3063 – LICENSED PROFESSIONAL ENGINEER

## L1

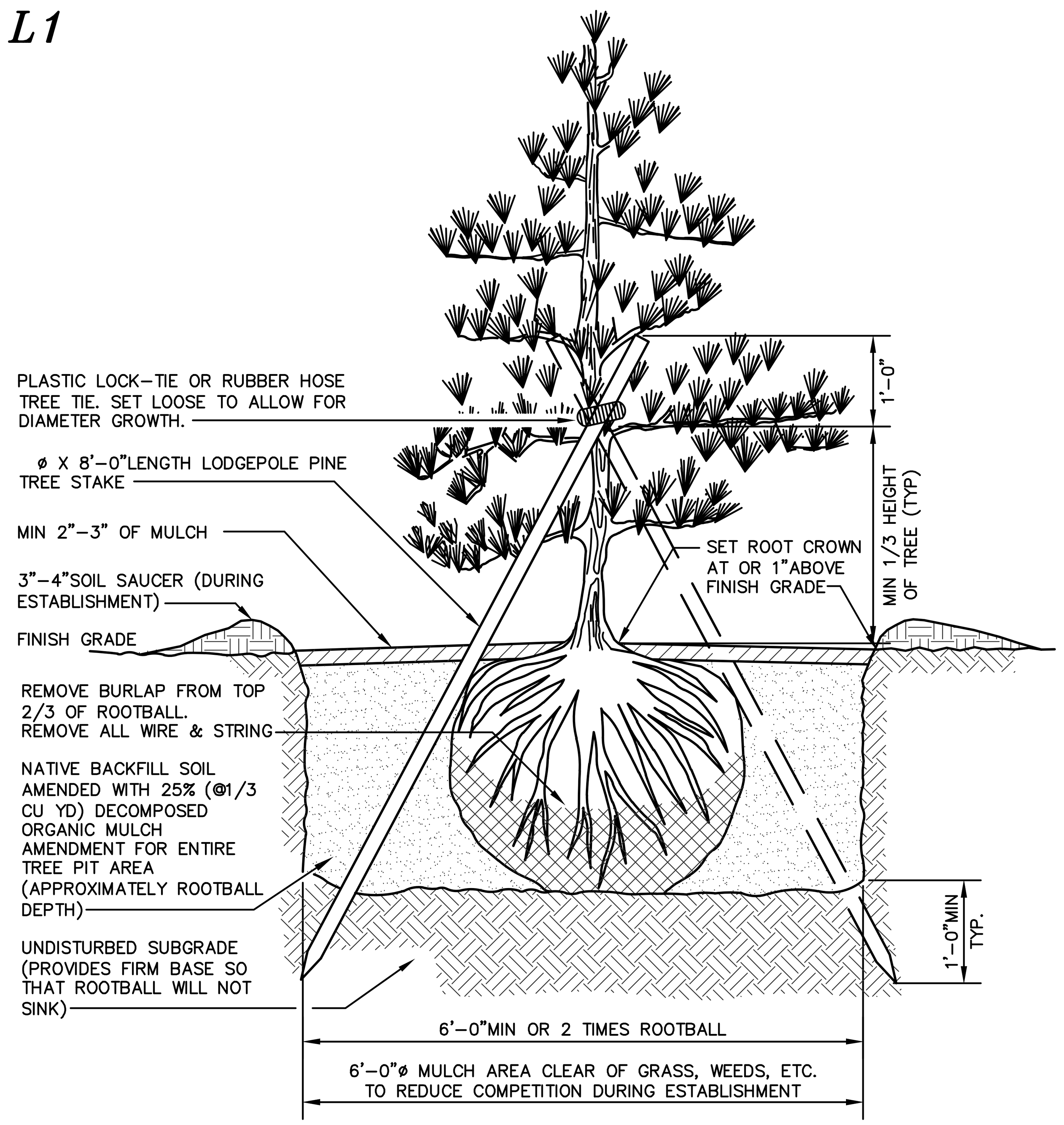


*CONIFERIOUS TREE PLANTING*

## L2

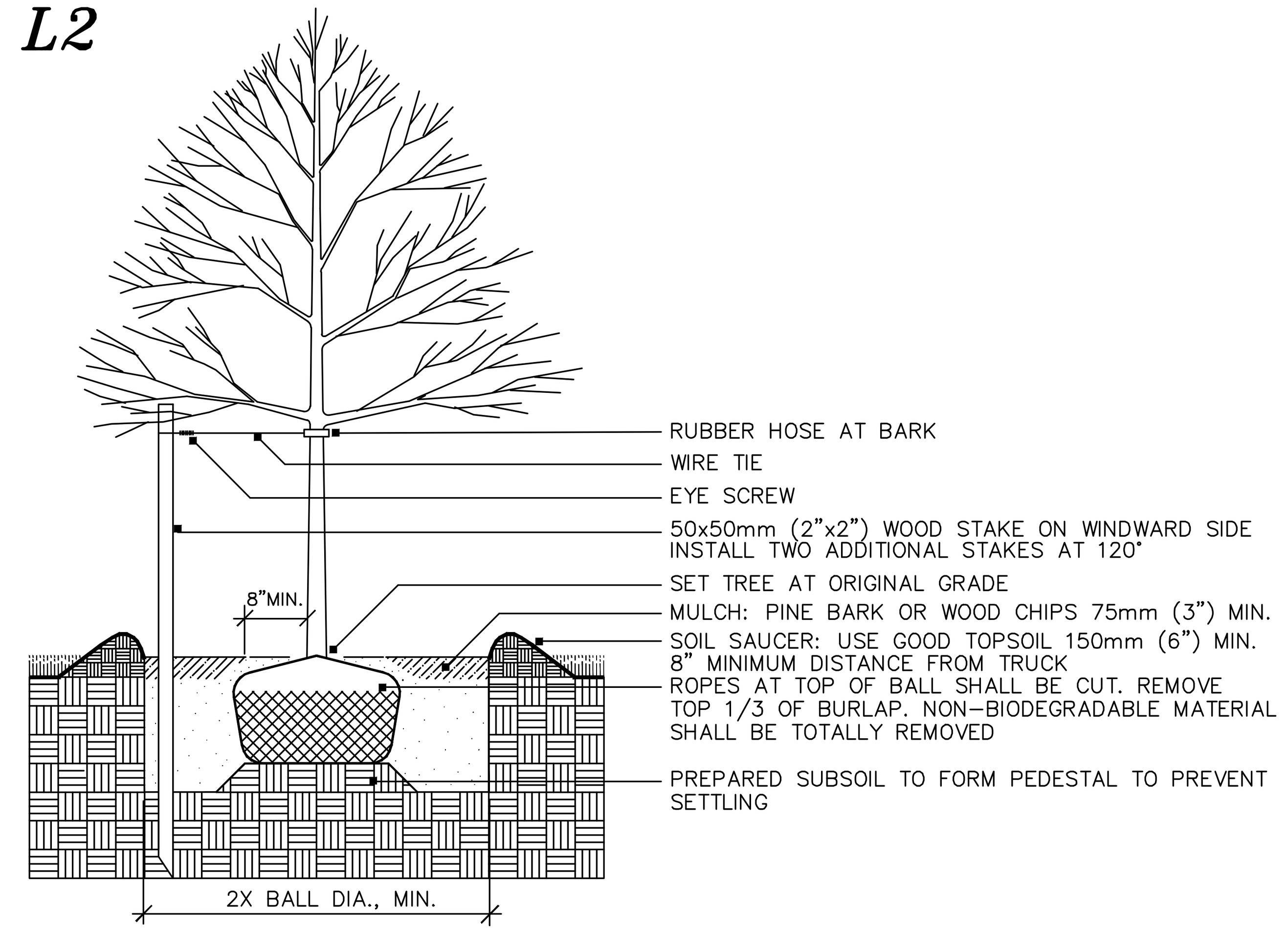


*DECIDUOUS TREE PLANTING*

NOTE: STAKING TO BE USED IN PARKING ISLANDS AND OTHER CONFINED AREAS AS NECESSARY TO AVOID CONFLICTS WITH PEDESTRIANS

## L3

NOTES:

1. SCARIFY ROOT MASS OF CONTAINERIZED PLANT MATERIAL.
2. INSTALL CONTAINERIZED PLANTS AT FINSHED GRADE
3. TAMP PLANTING MIX FIRMLY AS PIT IS FILLED AROUND EACH PLANT BALL.
4. OMIT COLLAR AROUND EACH SHRUB WHEN IRRIGATION SYSTEM IS PRESENT.
5. SOAK EACH PLANT BALL AND PIT IMMEDIATELY AFTER INSTALLATION.

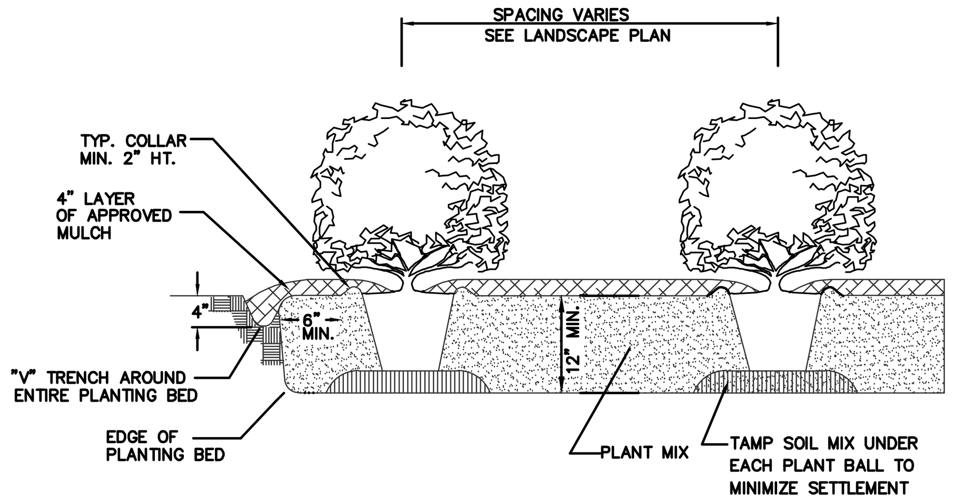


TYPICAL PLANTING BED DETAIL

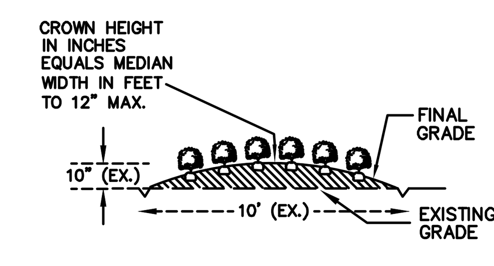


TYPICAL BED CROWNING

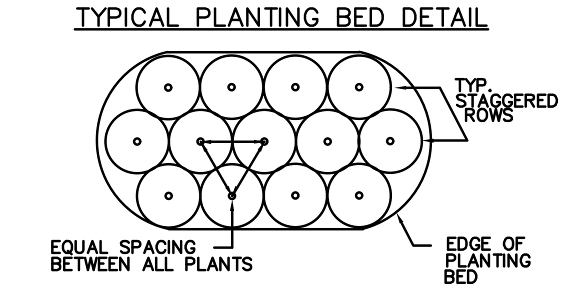


TYPICAL PLANTING BED PLAN

*SHRUB & HEDGE PLANTING*

## L4

*TYPICAL SLOPE GROUND COVER PLANTINGS*

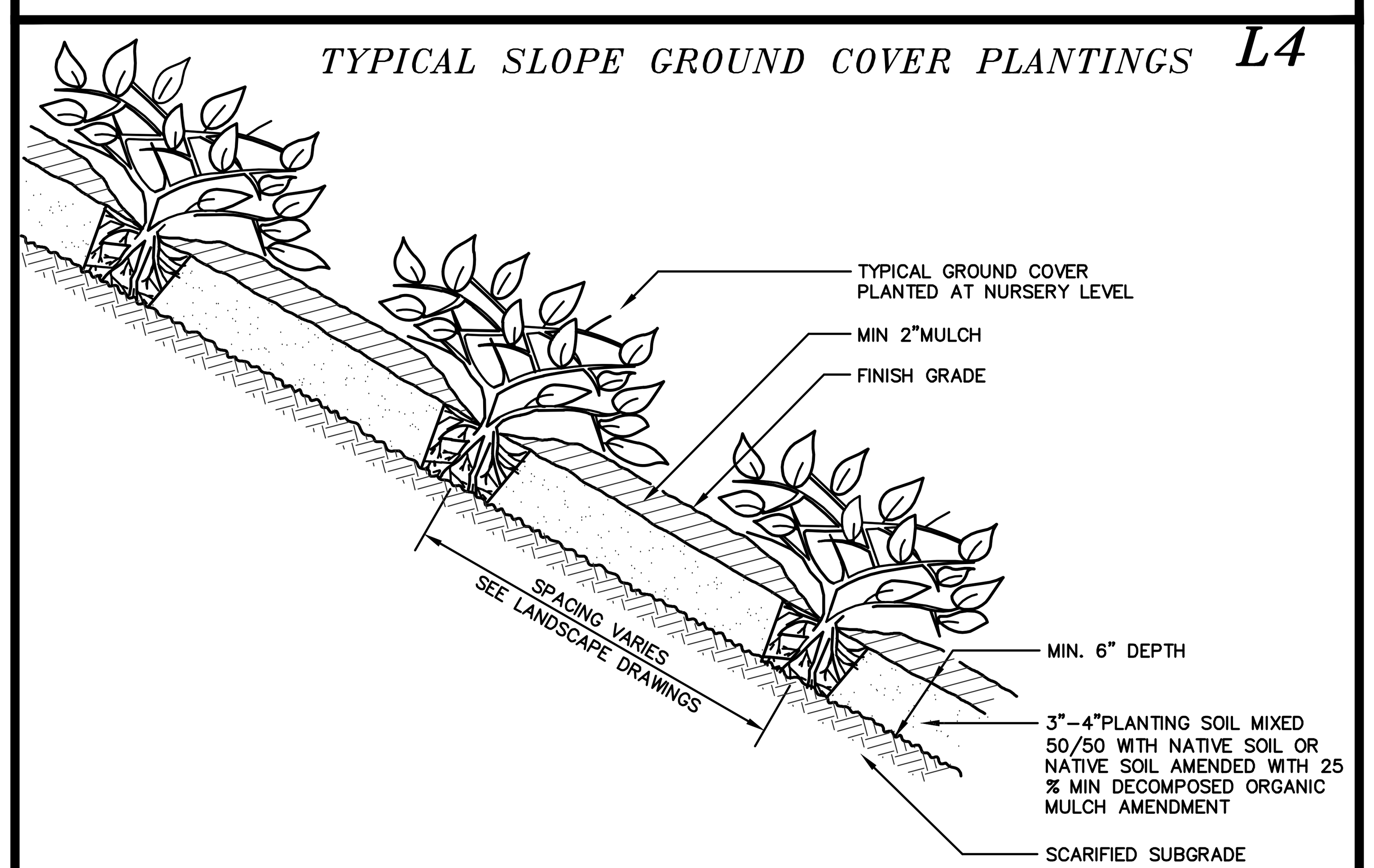


## L5

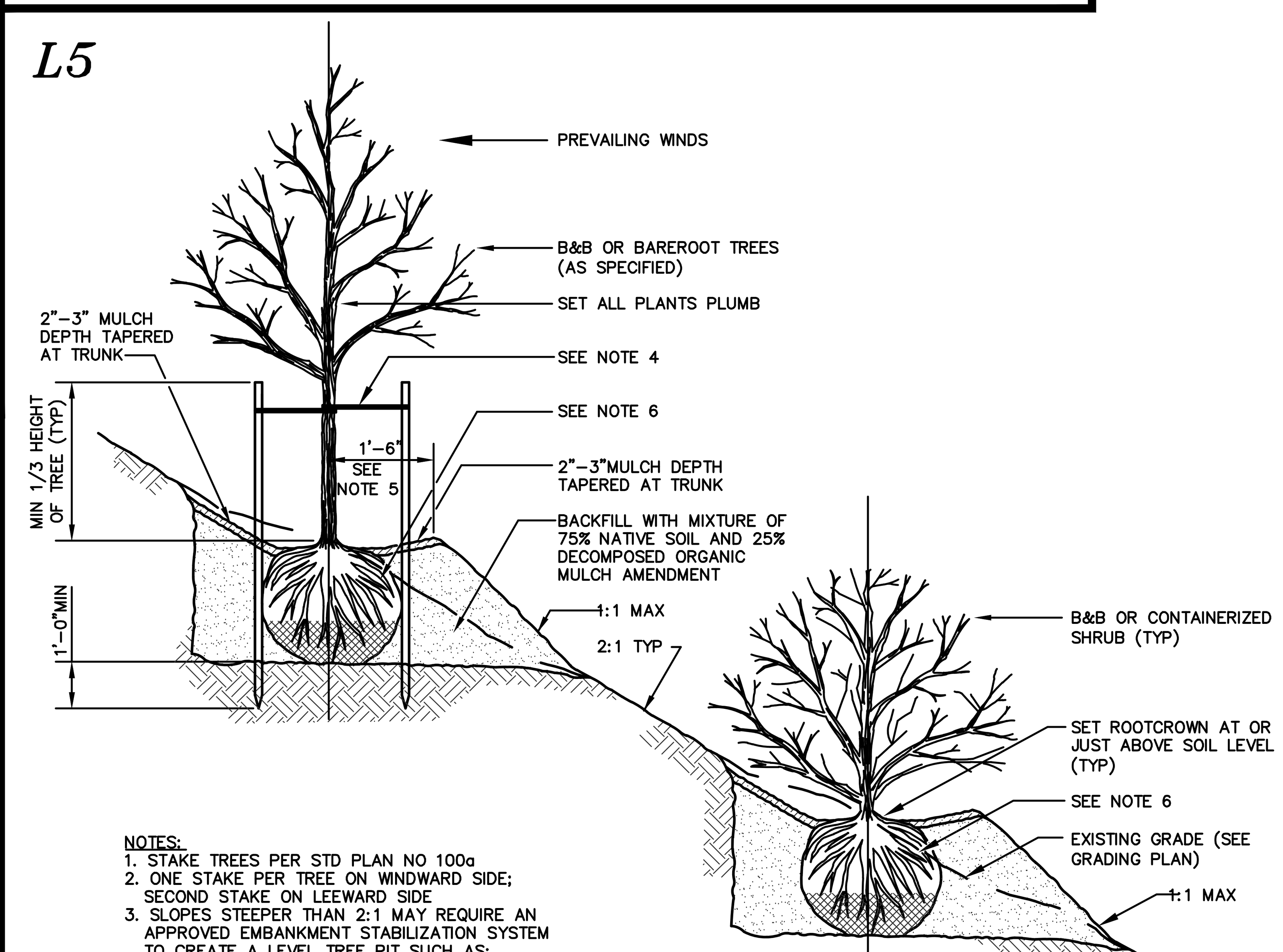


NOTES:
1. STAKE TREES PER STD PLAN NO 100a
2. ONE STAKE PER TREE ON WINDWARD SIDE; SECOND STAKE ON LEEWARD SIDE
3. SLOPES STEEPER THAN 2:1 MAY REQUIRE AN APPROVED EMBANKMENT STABILIZATION SYSTEM TO CREATE A LEVEL TREE PIT SUCH AS:
   - –ROCK FACING
   - –PRECAST CONCRETE WALL UNITS
   - –TIMBER WALL
   - –MANUFACTURED SLOPE RETENTION UNITS
4. CHAINLOCK TREE TIE. LOOP EACH TIE AROUND TREE LOOSELY TO PROVIDE 1" SLACK FOR DIAMETER GROWTH.
5. SHAPE SOIL TO PROVIDE 3' DIAMETER OR ROOTBALL DIAMETER, WHICHEVER IS GREATER, WATERING RING.
6. REMOVE ALL WIRE AND STRING. REMOVE TOP 2/3 OF BURLAP.

*TREE PLANTING ON SLOPES*

## L6

***NOTES:***

1.) CALL DIG SAFE PRIOR TO BEGINNING WORK. (1–888–344–7233). THE LANDSCAPE CONTRACTOR IS ADVISED OF THE PRESENCE OF UNDERGROUND UTILITIES AND SHALL VERIFY THE EXISTENCE AND LOCATION OF THE SAME BEFORE COMMENCING AND DIGGING OPERATIONS. THE LANDSCAPE CONTRACTOR SHALL REPLACE OR REPAIR UTILITIES, PAVING, WALKS, CURBING, ETC DAMAGED IN PERFORMANCE OF THIS JOB AT NO ADDITIONAL COST TO THE OWNER OR GENERAL CONTRACTOR.

2.) CONTRACTOR SHALL THOROUGHLY FAMILIARIZE THEMSELVES WITH ALL SITE CONDITIONS PRIOR TO CONSTRUCTION BIDDING. SEE NOTE XXX ON OVERALL SITE PLAN.

3.) PROVIDED SMOOTH TRANSITION WHERE NEW WORK MEETS EXISTING CONDITIONS.

4.) ALL PLANT MATERIAL INSTALLED SHALL MEET THE SPECIFICATIONS OF "AMERICAN STANDARD FOR NURSERY STOCK" BY THE AMERICAN ASSOCIATION OF NURSERYMEN

5.) ALL PLANT MATERIALS SHALL BE FREE FROM INSECTS AND DISEASE.

6.) ALL PLANTINGS SHALL BE DONE IN ACCORDANCE WITH ACCEPTABLE HORTICULTURAL PRACTICES. THIS IS TO INCLUDE PROPER PLANTING MIX, PLANT BED AND TREE PIT PREPARATION, PRUNING STAKING OR GUYING, WRAPPING, SPRAYING, FERTILIZATION, PLANTING AND ADEQUATE MAINTENANCE UNTIL ACCEPTANCE FROM OWNER.

7.) ALL GRASS, OTHER VEGETATION AND DEBRIS SHALL BE REMOVED FROM ALL PLANTING AREAS PRIOR TO PLANTING.

8.) THE GENERAL CONTRACTOR SHALL BE RESPONSIBLE FOR THE PROTECTION OF EXISTING AND NEWLY PLANTED TREES AND SHRUBS DURING THE CONSTRUCTION PROCESS. WHERE REQUIRED, THE CONTRACTOR SHALL INSTALL TEMPORARY FENCING (SNOW OR EQUAL) AROUND EXISTING TREES AND SHRUBS THAT COULD BE IMPACTED BY THE CONSTRUCTION PROCESS. STORAGE OF CONSTRUCTION EQUIPMENT, CONSTRUCTION MATERIALS, SNOW STORAGE AND OR VEHICLE PARKING SHALL NOT BE PERMITTED WITHIN THE DRIP LINE OF TREES OR TWENTY FEET WHICH EVER IS GREATER.

9.) NEW PLANTINGS SHALL BE INSTALLED PER PROJECT DRAWINGS AND SPECIFICATION THAT INCLUDE FERTILIZATION AND MULCHING AS REQUIRED.

10.) ALL SHRUB BEDS AND TREE PITS SHALL BE MULCHED WITH 3" CLEAN SHREDDED BLACK MULCH

11.) WHERE INDICATED ON PLAN, PLANTING SOIL MIXTURE FOR GROUND COVER AND PERENNIAL BED AREAS SHALL CONSIST OF FOUR PARTS TOPSOIL, TWO PARTS SPHAGNUM PEAT MOSS, AND ONE PART HORTICULTURAL PERLITE BY VOLUME. PEAT MOSS MAY BE SUBSTITUTED WITH WELL–ROTTED OR DEHYDRATED MANURE OR COMPOST. ROTOTILL BEDS TO A DEPTH OF 8 INCHES.

12.) MAINTENANCE OF NEW PLANTINGS AND LAWNS SHALL BE THE RESPONSIBILITY OF THE GENERAL CONTRACTOR AND OR LANDSCAPE SUBCONTRACTOR UNTIL ACCEPTANCE BY THE OWNER. RESPONSIBILITIES SHALL INCLUDE WATERING WEEDING AND MOWING AS NECESSARY. ALL PLANT MATERIAL SHALL BE GUARANTEED FOR A PERIOD OF ONE YEAR FROM THE DATE OF ACCEPTANCE, REPLACEMENT MATERIAL SHALL BE GUARANTEED FOR AND ADDITIONAL YEAR FROM TIME OF INSTALLATION.

13.) THE GENERAL CONTRACTOR SHALL BE RESPONSIBLE FOR MAINTAINING ALL TEMPORARY EROSION CONTROL MEASURES DURING THE CONSTRUCTION PHASE AND UNTIL ALL AREAS HAVE BEEN STABILIZED AND ACCEPTED BY THE OWNER. THE GENERAL CONTRACTOR SHALL PROVIDE WEEKLY INSPECTIONS OF EROSION MEASURE AND IMMEDIATELY AFTER STORM EVENTS AND REPAIR AS NECESSARY.

14.) THE GENERAL CONTRACTOR AND OR THE LANDSCAPE SUBCONTRACTOR SHALL BE RESPONSIBLE FOR THE REMOVAL OF ALL THREE GUYING MATERIAL ONCE PLANT MATERIAL HAS BEEN ESTABLISHED. (MINIMUM OF ONE GROWING SEASON). ALL TEMPORARY EROSION CONTROL MEASURE SHALL BE REMOVED ONCE STABILIZATION OF DISTURBANCE HAS BEEN ACCEPTED BY OWNER.

15.) THE GENERAL CONTRACTOR SHALL BE RESPONSIBLE FOR A MINIMUM OF TWO MOWINGS FOR ALL TURF AREAS OR UNTIL ACCEPTANCE BY THE OWNER. A MINIMUM UNIFORM 75% CATCH OF TURF IS REQUIRED FOR ACCEPTANCE.

16.) ALL PLANTINGS SHALL BE WATERED REGULARLY DURING THEIR FIRST YEAR AND MAINTAINED PERMANENTLY IN GOOD GROWING CONDITION AS AN EFFECTIVE VISUAL SCREEN.

17.) SHRUBS OR TREES WHICH DIE SHALL BE REPLACED WITHIN ONE GROWING SEASON WITH NEW SHRUBS OR TREES TO ENSURE CONTINUED COMPLIANCE WITH APPLICABLE LANDSCAPING REQUIREMENTS.

18.) ALL REQUIRED LANDSCAPING SHALL BE INSTALLED BEFORE OCCUPANCY, OR WITHIN SIX MONTHS IF OCCUPANCY OCCURS DURING WINTER CONDITIONS.

19.) TREES ARE TO BE 2–2.5" CALIPER 6" OFF THE ROOT BALL.

20.) ALL PLANT STOCK SHALL CONFORM TO ANSI Z260.1 – NURSERY STOCK, LATEST EDITIONS (AMERICAN ASSOCIATION OF NURSERYMEN, INC.)

21.) 4" AGED PINEBARK MULCH AND A WEED BARRIER (TY–PAR FABRIC OR APPROVED EQUAL) SHALL BE APPLIED TO ALL SHRUB AND GROUND COVER BEDS. INSTALL WEED BARRIER AS PER MANUFACTURERS RECOMMENDATIONS.

22.) PLANT–PIT BACK–FILL SHALL BE MIXED AT A RATE OF 7 PARTS OF TOPSOIL TO 2 PARTS OF DEHYDRATED COW MANURE. SLOW RELEASE FERTILIZER SHALL BE APPLIED AS PER MANUFACTURERS RECOMMENDATIONS. USE EXISTING ON–SITE TOPSOIL AS PART OF BACK FILL WHEN AVAILABLE.

23.) ALL LANDSCAPED AREAS NOT PLANTED WITH TREES, SHRUBS OR GROUNDCOVER SHALL BE RESTORED WITH SEED OR SOD AS INDICATED ON PLANS.

## L8

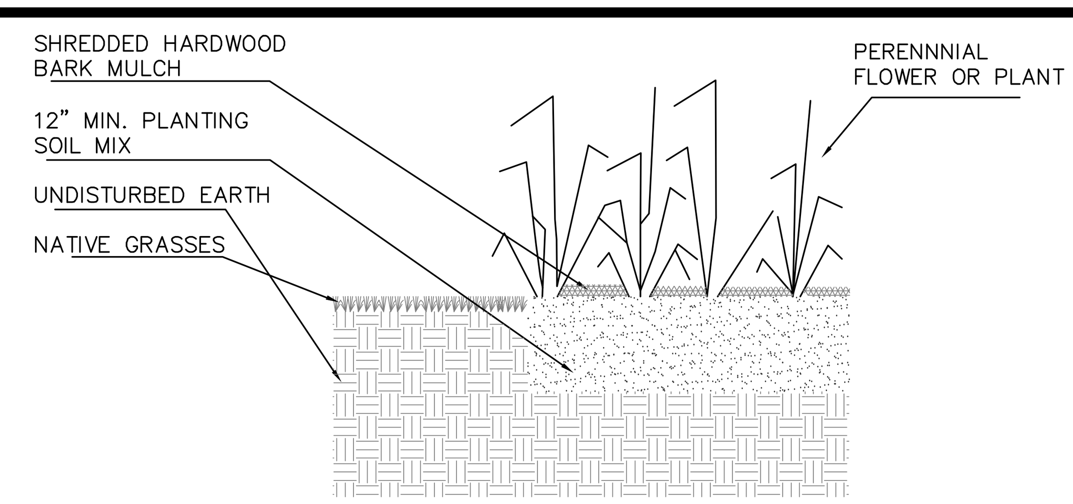


*PERENNIAL PLANTING DETAIL*

## L7

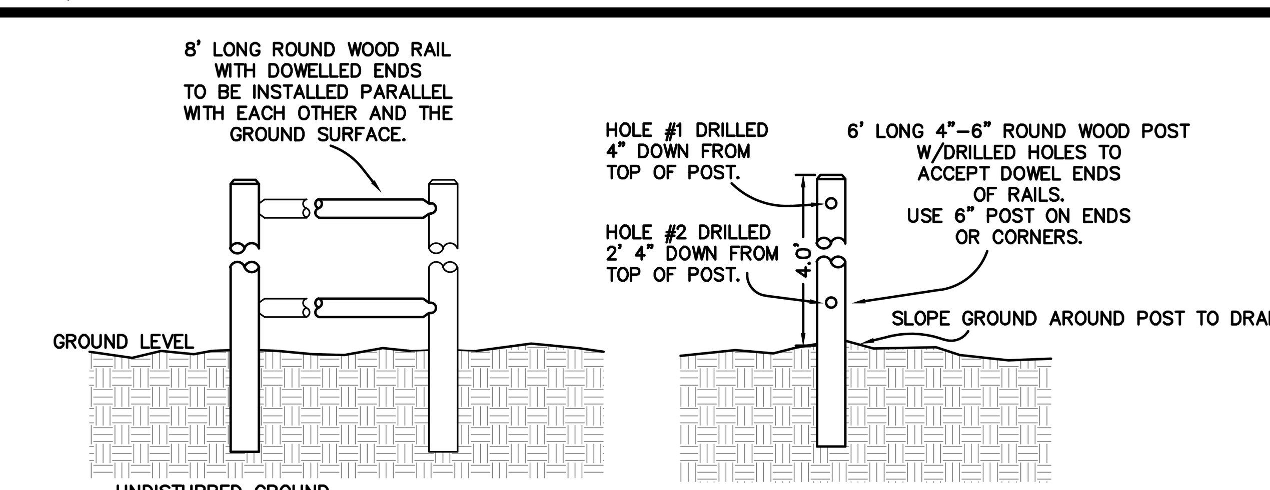


*TYPICAL POST & RAIL FENCE DETAIL*
N.T.S.

## L–101

DOVER FILE #P18–07

| REVISION | DATE | DESCRIPTION |
|---|---|---|
| #1 | 4–16–18 | REVISED PER TRC COMMENTS OF 4–5–18 |

LANDSCAPING CONSTRUCTION DETAILS

COMPOSITE DETAILS

RESIDENTIAL SUBDIVISION REVIEW
LAND OF
TDAK & COMPANY LLC
99 SIXTH STREET
DOVER, N.H.
***TAX MAP 35, LOT 57***

BERRY SURVEYING & ENGINEERING
335 SECOND CROWN POINT ROAD
BARRINGTON, NH 03825 (603)332–2863

SCALE: AS NOTED
DATE : MARCH 28, 2018
FILE NO. : DB 2017–060

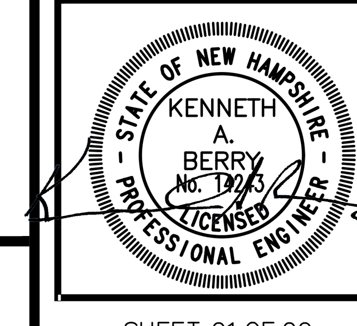

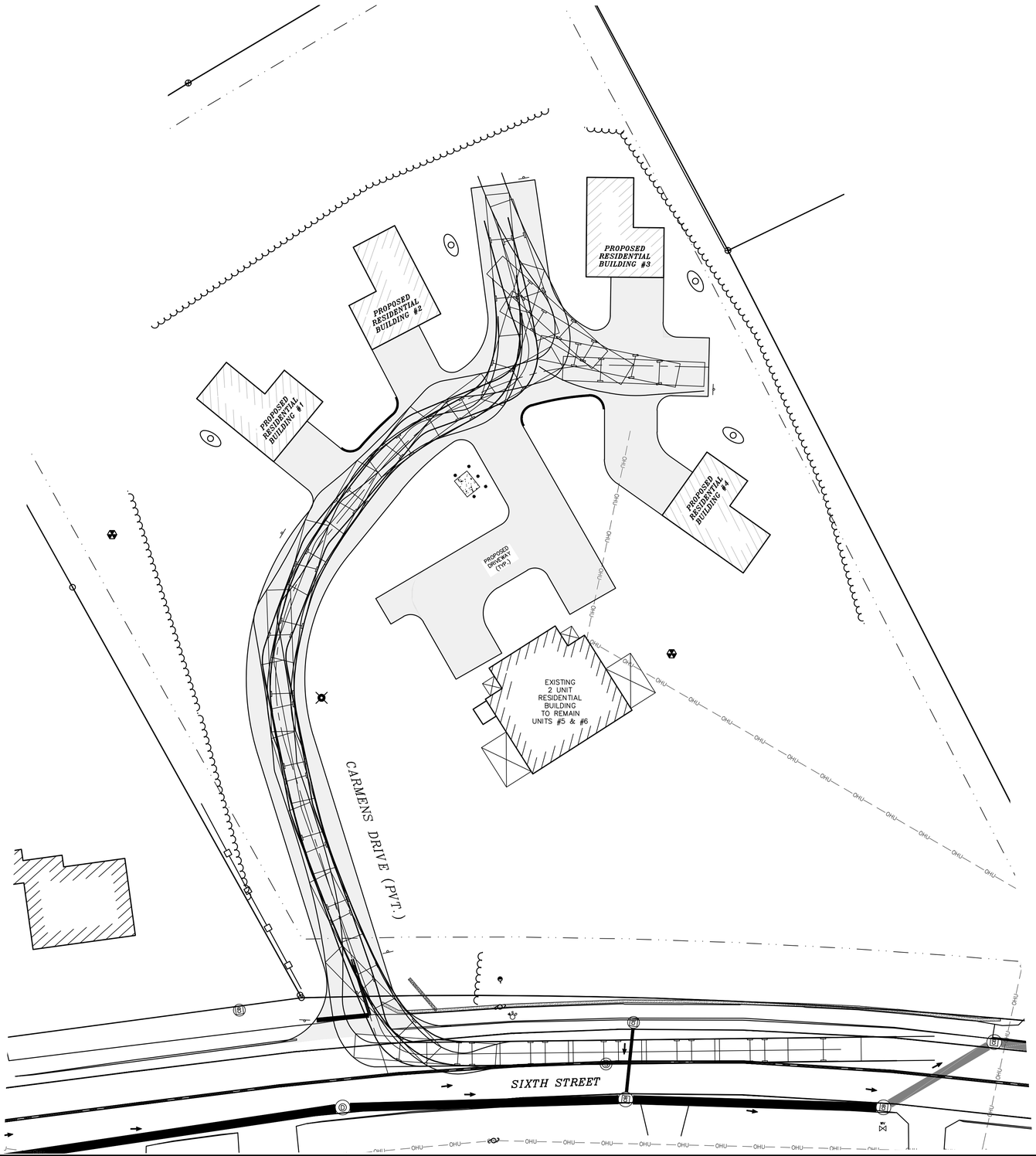


***GENERAL PLAN SET NOTES:***

1.) OWNER: TDAK & COMPANY LLC
9 KELSEY DRIVE
GREENLAND, NH 03840

2.) DOVER TAX MAP 35, LOT 57

3.) LOT AREA: 90,322 Sq. Ft. 2.07 Ac.

4.) S.C.R.D. BOOK 4477, PAGE 557

5.) THE PURPOSE OF THIS PLAN IS TO SHOW THE TURNING MOVEMENTS AVAILABLE TO THE TI CITY OF DOVER FIRE TRUCK.

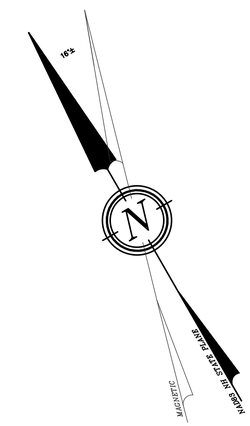


GRAPHIC SCALE

20 0 10 20 40 80

( IN FEET )
1 inch = 20 ft.

DOVER FILE #P18-07

| REVISION | DATE | DESCRIPTION |
|---|---|---|
| #1 | 4-16-18 | REVISED PER TRC COMMENTS OF 4-5-18 |

T1 TURNING TEMPLATE
RESIDENTIAL SUBDIVISION REVIEW
LAND OF
TDAK & COMPANY LLC
99 SIXTH STREET
DOVER, N.H.
***TAX MAP 35, LOT 57***

BERRY SURVEYING & ENGINEERING
335 SECOND CROWN POINT ROAD
BARRINGTON, NH 03825 (603)332-2863

SCALE : 1 IN. EQUALS 20 FT.
DATE : MARCH 28, 2018
FILE NO. : DB 2017-060

STATE OF NEW HAMPSHIRE
KENNETH A. BERRY
No. 14043
LICENSED
PROFESSIONAL ENGINEER

CITY OF DOVER

# PLANNING BOARD - STAFF MEMO FILE #P18-19

Application Type: Conditional Use Permit
Applicant(s): TDAK & Company LLC
Owner(s): TDAK & Company LLC
Location: 99 Sixth Street (Assessor's Map 35, Lot 57)
Meeting Date: May 8, 2018

**INTENT:** To obtain a Conditional Use Permit to construct a 345 foot private road impacting 6,200 square feet of Conservation District area of 20% slopes.

**LOTS/UNITS PROPOSED:** 4 single family houses and one existing duplex

**AGENDA ITEM:** # 4-F

**ACREAGE:** 2.07 acres

**ZONING DISTRICT:** Medium Density Residential District (R-12)

**EXISTING LAND USE:** Duplex

**PROPOSED LAND USE:** 4 single family houses and one existing duplex

**SURROUNDING LAND USE:** Residential – single family, two family and multi-family

**ZBA ACTION:** Variance to allow a duplex (H79-32)

**ATTACHMENTS:**
CUP application and materials, plan

**APPLICATION IS COMPLETE:** Yes

**NOTICES SENT:** Abutter notices were sent by certified and/or first class mail to all abutters for this meeting

**PERMITS REQUIRED:**
-Conditional Use Permit

**WAIVERS REQUESTED:** None

**Summary of Request and Background**
The applicant is requesting a Conditional Use Permit for the construction of a private road that impacts a Conservation District area of 20% or greater slopes. The total proposed impact is 6,200 square feet.

The Conservation Commission has not reviewed this proposal yet, but it is expected to be on their May 14th agenda. If the Planning Board decides to conduct a site visit, the Conservation Commission would be invited to attend.

**Consistency with Land Use Regulations**
The Conservation District ordinance provides for Conditional Use Permits to allow impacts to land than has slopes of 20% or greater if standards related to avoidance of impact, minimization of impact, mitigation and soil erosion and sedimentation control are met.

**STAFF RECOMMENDATION:**

The Planning Department recommends the Planning Board accept the application, open the public hearing, table the public hearing, continue the item to the regular meeting on May 22nd and schedule a site walk.

# 99 Sixth Street

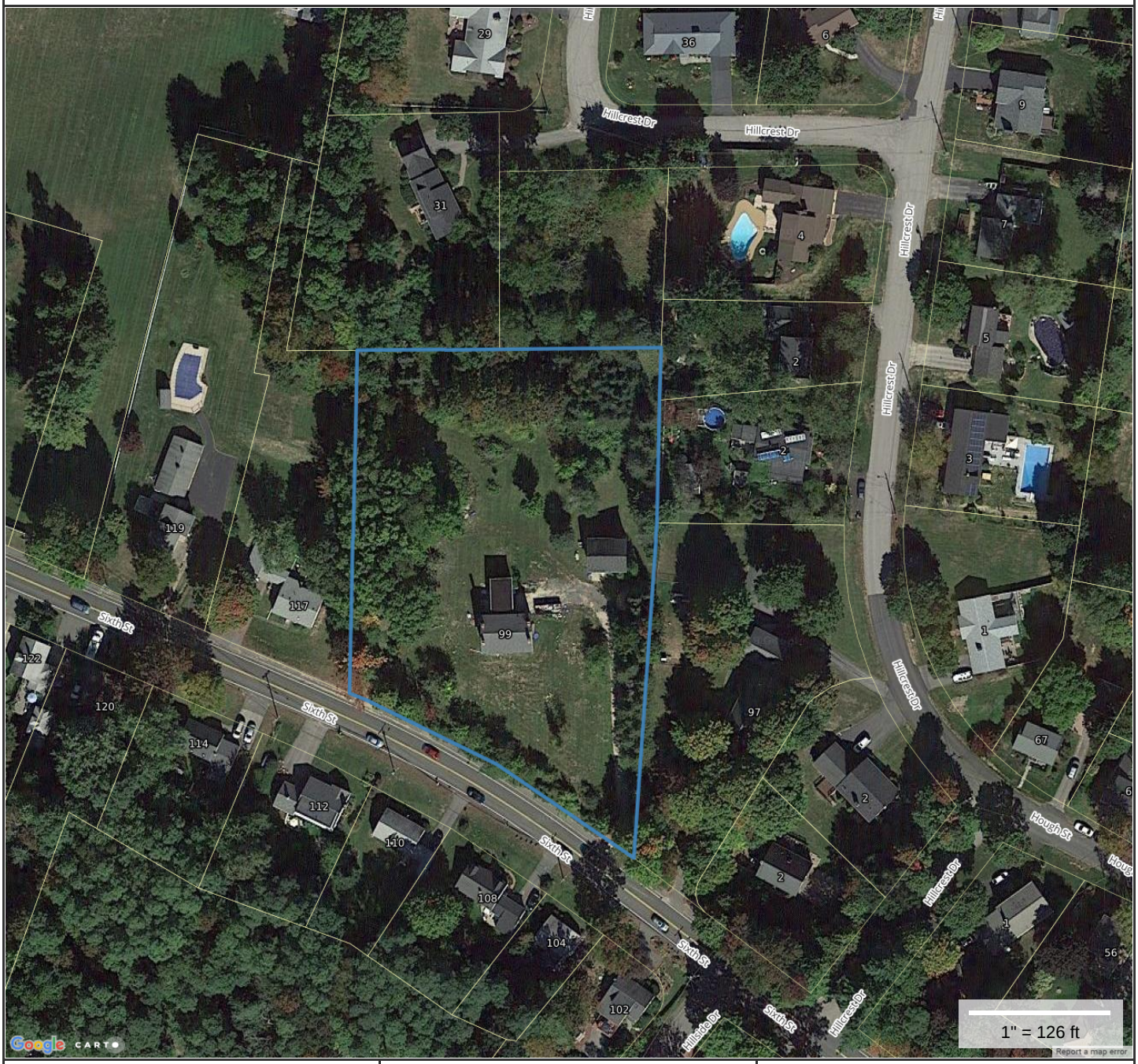


**Property Information**

| | |
|---|---|
| **Property ID** | 35057-000000 |
| **Location** | 99 SIXTH ST |
| **Owner** | TDAK & COMPANY LLC |

MAP FOR REFERENCE ONLY
NOT A LEGAL DOCUMENT

City of Dover, NH makes no claims and no warranties, expressed or implied, concerning the validity or accuracy of the GIS data presented on this map.

Parcels updated 03/29/2018
Properties updated 05/01/2018

# City of Dover, New Hampshire
# CONDITIONAL USE PERMIT APPLICATION

[Revision Date: May 18, 2017]

| Office Use Only | Project #: _____ | Date Received: _____ |
|---|---|---|
| | Amount Paid: _____ | Time Received: _____ |

## APPLICANT AND OWNER INFORMATION

Name of Applicant: TDAK & Company LLC Telephone # 603-235-8469

Address of Applicant: 9 Kelsey Drive, Greenland, NH 03840

E-Mail Address: TDAK3.0@gmail.com

Name of Property Owner (if different from applicant): _____ Telephone # _____

Address of Property Owner: _____

## PROPERTY INFORMATION

Assessor's Map # 35 Lot(s) # 57

Address of Property: 99 Sixth Street

Zoning District(s) R-12 Overlay District(s) _____

Existing Use of Property: Residence / 2 Units

## CONDITIONAL USE PERMIT INFORMATION

**Type of Conditional Use Permit (Check All That Apply):**

- ☒ Conservation District (Slopes)
- ☐ RCM Use Overlay District
- ☐ I-1 District Uses
- ☐ Groundwater Protection
- ☐ Off-Street Parking and Loading
- ☐ Alternative Treatment Center
- ☐ Wetland Protection District
- ☐ Central Business District
- ☐ Heritage Residential District

Describe Proposed Use or Activity That Requires Conditional Use Permit and Describe Any Impacts:

See Attached

List Any Associated State or Federal Permits That Have Been or Will Be Applied For and Indicate Their Status: NHDES Sewer Discharge

Name of Professional That Prepared Plans: Kenneth A. Berry
Berry Surveying & Engineering

Address 335 Second Crown Point Road, Barring, NH 03825 Telephone #: 603-332-2863

Professional License #: 14243 E-mail address: k.berry@berrysurveying.com

**SIGNATURES**

I/We hereby submit this application to the City of Dover Planning Board and attest that to the best of my knowledge all of the information on this application form and in the accompanying application materials and documentation is true and accurate. As applicant or as agent, I attest that I am duly authorized to act in this capacity.

Signature of Property Owner: _____ Date: 4-16-18

Signature of Applicant (if different from owner): _____ Date: _____

Signature of Agent: _____ Date: 4-16-18

**AUTHORIZATION TO ENTER SUBJECT PROPERTY**

I, and my successors, hereby authorize members of the Dover Planning Board, Planning Department and other pertinent City Departments and boards to enter my property for the purpose of evaluating this application, including performing inspections during the application phase, post-approval phase, construction phase and occupancy phase. It is understood that these individuals must use all reasonable care, courtesy, and diligence when on the property.

Signature of Property Owner: _____ Date: 4-16-18

**BERRY SURVEYING & ENGINEERING**
335 Second Crown Point Road
Barrington, NH 03825
Phone: (603) 332-2863
Fax: (603) 335-4623
www.BerrySurveying.Com

April 18, 2018

City of Dover Planning Board
288 Central Ave
Dover, NH 03820

RECEIVED
Planning Office
APR 18 2018
Dover, New Hampshire

RE: Proposed Subdivision
TDAK & Company
99 Sixth Street
Conditional Use Permit

Mr. Chairman and Members of the Dover Planning Board,

Berry Surveying & Engineering (BS&E,) on behalf of TDAK & Company LLC (TDAK), respectfully requests the City of Dover Planning Board to approve the following Conditional Use Permit:

- Maximum 20% slope disturbance of 3,000 Sq. Ft.

TDAK owns the parcel known as 99 Sixth Street in Dover, NH (Tax Map 35, Lot 57). BS&E has conducted an on-site survey of the parcel which includes a topographic analysis as well as a wetlands analysis. Please note there are no wetlands found on the parcel. There are two driveways which are used to access the parcel from Sixth Street. The rear of the site slopes gently to the Hillcrest Drive neighborhood, and is generally wooded. The front of the project site contains a wooded buffer and steeper slopes.

The proposal is to build a new private road up the existing westerly driveway and close off the easterly driveway. As is sits currently, the majority of the slopes greater than 20% sit at the front of the property where the existing driveways are currently located and where the proposed roadway will be constructed. By placing the proposed roadway on the existing driveway, the overall impact on the parcel will be limited but areas containing 20% slopes will be affected due to the existing topography in that location of the lot.

As it stands currently, the proposed subdivision will affect approximately 6,200 Sq. Ft. of conservation land. However it should be noted that all the 20% slopes at the front of the parcel are manmade and not naturally occurring.

This road location and lot layout was deemed the best after careful consideration of the proposed road grade. In addition to this, it will allow for a shorter road and less excavation due to roadway design. In turn this will make the subdivision more appealing and generate a smaller effect on the surrounding areas due to the reduced construction.

In addition, multiple erosion and sediment control measures will be in place to ensure that runoff and sediment is maintained throughout the construction process. Silt soxx will be placed incrementally along the steep slopes to provide stabilization until the proposed vegetation has set it. In addition, dry swales are proposed along both sides of the roads, at the toe of the slopes. These dry swales will trap the water and re-infiltrate into the ground to prevent the slopes from washing out. As an added measure of protection, both temporary and permanent check dams will be placed in the swales to not only protect them during construction but also provide stabilization to the abutting slopes and roadway. Onsite inspections will be held weekly to ensure that these erosion and sediment control measures are in place and there is, as little effect as possible on the surrounding areas.

Thank you for your time and attention to this matter, and we hope you look favorably upon the request.

Respectfully Submitted,

BERRY SURVEYING & ENGINEERING

Christopher R. Berry
Principal, President

**BERRY SURVEYING & ENGINEERING**
335 Second Crown Pt. Rd., Barrington, NH 03825
(603) 332-2863 / (603) 335-4623 FAX
www.BerrySurveying.Com

**P18-19** **99 Sixth Street**

| Property ID | Location | Owner 1 | Owner 2 | Owner Address 1 | City | State | Zip |
|---|---|---|---|---|---|---|---|
| 34010-000000 | 102 SIXTH ST | MCHENRY DARLENE | | 102 SIXTH ST | DOVER | NH | 03820 |
| 34012-000000 | 104 SIXTH ST | THOMPSON SETH G & | THOMPSON GLENN | 104 SIXTH ST | DOVER | NH | 03820-2624 |
| 34012-A00000 | 108 SIXTH ST | GINN KATHERINE K | | 644 STATE ST APT 4 | PORTSMOUTH | NH | 03801 |
| 34013-000000 | 1 6 HILLSIDE DR | PAT PAR INC | | 385 SIXTH ST | DOVER | NH | 03820-5935 |
| 34013-A00000 | 110 SIXTH ST | RUEL PAUL LIFE ESTATE & | MARCOTTE RHONDA AND LOPES TAMARA 50% EA | 110 SIXTH ST | DOVER | NH | 03820 |
| 34013-B00000 | 112 SIXTH ST | MORRISSEY-SMITH KIMBERLEE J | | 112 SIXTH ST | DOVER | NH | 03820 |
| 34013-C00000 | 114 SIXTH ST | LUNT TERESA J | LUNT BRIAN R | 114 SIXTH STREET | DOVER | NH | 03820 |
| 34013-D00000 | 102 B SIXTH ST | VERSCHUEREN JAMES TRUSTEE | VERSCHUEREN JAMES REVOCABLE LIVING TRUST | 102 B SIXTH ST | DOVER | NH | 03820 |
| 34014-000000 | 120 SIXTH ST | NAGEL MICHAEL D & | NAGEL SONJA M | 120 SIXTH ST | DOVER | NH | 03820 |
| 35056-000000 | 97 SIXTH ST | CARVILLE CAROLE A TRUSTEE | CARVILLE CAROLE REVOCABLE TRUST | 97 SIXTH STREET | DOVER | NH | 03820 |
| 35056-001000 | 2 B HILLCREST DR | CARVILLE CRAIG E | CARVILLE COLLETTE A | 2B HILLCREST ST | DOVER | NH | 03820 |
| 35056-002000 | 2 C HILLCREST DR | CARVILLE CHARLES R | | 2C HILLCREST DRIVE | DOVER | NH | 03820 |
| 35056-H00000 | 4 HILLCREST DR | SUPPLE GARRETT E & | SUPPLE JEANNE V | 4 HILLCREST DRIVE | DOVER | NH | 03820 |
| 35056-I00000 | 2 HILLCREST DR | DIONNE NORMAN J | DIONNE LORRIE J | 2 HILLCREST DR | DOVER | NH | 03820 |
| 35056-K00000 | 29 HILLCREST DR | MURRAY PATRICK M | | 17 HILLCREST DRIVE | DOVER | NH | 03820 |
| 35056-R00000 | 31 HILLCREST DR | KEENAN SUSAN E REV TRUST | KEENAN SUSAN E TRUSTEE | 31 HILLCREST DRIVE | DOVER | NH | 03820 |
| 35056-V00000 | HILLCREST DR | KEENAN SUSAN E REV TRUST | KEENAN SUSAN E TRUSTEE | 31 HILLCREST DRIVE | DOVER | NH | 03820 |
| 35058-000000 | 119 SIXTH ST | BICKFORD SANDRA TRUSTEE | BICKFORD FAMILY REVOCABLE TRUST | 119 SIXTH STREET | DOVER | NH | 03820 |
| 35058-A00000 | 117 SIXTH ST | REILLY WILLIAM P | | 117 SIXTH ST | DOVER | NH | 03820 |
| 35059-A00000 | SIXTH ST | MURRAY PATRICK M | | 29 HILLCREST DR | DOVER | NH | 03820 |
| 35074-000000 | 2 A HILLCREST DR | SMITH GORDON & SUSAN TRUSTEES | SMITH GORDON AND SUSAN REVOCABLE TRUST | 2A HILLCREST DRIVE | DOVER | NH | 03820 |
| | | TDAK & COMPANY LLC | | 9 KELSEY DRIVE | GREENLAND | NH | 03840 |
| | | BERRY SURVEYING & ENGINEERING | KENNETH A. BERRY, PE, LLS | 335 SECOND CROWN POINT ROAD | BARRINGTON | NH | 03825 |
| | | CINDY BALCIUS, CWS, CSS | STONEY RIDGE ENVIRONMENTAL LLC | 229 PROSPECT MOUNTAIN RD | ALTON | NH | 03809 |

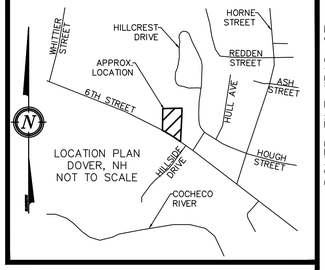


***IMPACT LEGEND:***

CONSERVATION AREA = 15,225 SqFt.
IMPACT AREA = 6,200 SqFt.

DOVER FILE #P18-07

| REVISION | DATE | DESCRIPTION |
|---|---|---|
| #1 | 4-16-18 | REVISED PER TRC COMMENTS OF 4-5-18 |

CONDITIONAL USE PERMIT PLAN
RESIDENTIAL SITE REVIEW
LAND OF
TDAK & COMPANY LLC
99 SIXTH STREET
DOVER, N.H.
*TAX MAP 35, LOT 57*

BERRY SURVEYING & ENGINEERING
335 SECOND CROWN POINT ROAD
BARRINGTON, NH 03825 (603)332-2863

SCALE : 1 IN. EQUALS 30 FT.
DATE : MARCH 28, 2018
FILE NO. : DB 2017-060

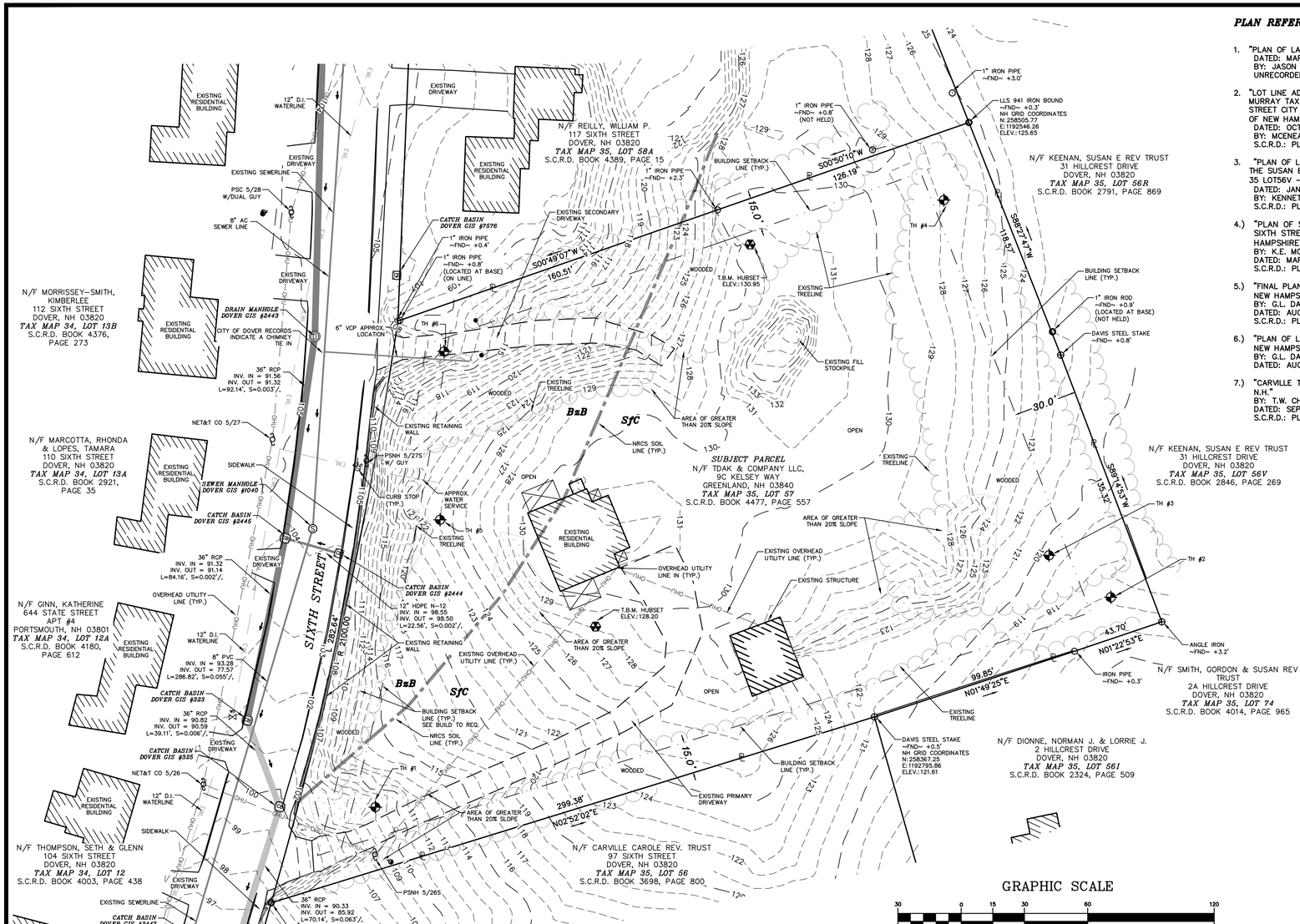


## PLAN REFERENCES:

1. "PLAN OF LAND PREPARED FOR TIMNIK, LLC"
   DATED: MARCH 25, 2016
   BY: JASON POHOPEK DESIGN & CONSTRUCTION, LLC
   UNRECORDED, ON FILE AT THIS OFFICE
2. "LOT LINE ADJUSTMENT PLAN PREPARED FOR PATRICK MURRAY TAX MAP 35, LOT NO.S 59 & 59A 125 SIXTH STREET CITY OF DOVER COUNTY OF STRAFFORD STATE OF NEW HAMPSHIRE"
   DATED: OCTOBER 24, 2013
   BY: MCENEANEY SURVEY ASSOCIATES, INC.
   S.C.R.D.: PLAN #106-081
3. "PLAN OF LAND FOR SUSAN E. KEENAN TRUSTEE OF THE SUSAN E. KEENAN REVOCABLE TRUST TAX MAP 35 LOT56V – LOT 13"
   DATED: JANUARY 28, 2012"
   BY: KENNETH E. MOORE
   S.C.R.D.: PLAN #103-031
4.) "PLAN OF SUBDIVISION FOR CAROLE A. CARVILLE SIXTH STREET & HILLCREST DRIVE DOVER, NEW HAMPSHIRE"
   BY: K.E. MOORE & B.G. STAPLES LAND SURVEYORS
   DATED: MARCH, 1990
   S.C.R.D.: PLAN #37A-144
5.) "FINAL PLAN PART OF THE CARVILLE TRACT DOVER NEW HAMPSHIRE"
   BY: G.L. DAVIS & ASSOCIATES ENGINEERS
   DATED: AUGUST 6, 1956
   S.C.R.D.: PLAN #37 POCKET #3 FOLDER #4
6.) "PLAN OF LOTS CARLTON C. & LENA B. MEAD DOVER NEW HAMPSHIRE"
   BY: G.L. DAVIS & ASSOCIATES ENGINEERS
   DATED: AUGUST 6, 1663? POCKET #1 FOLDER #2
7.) "CARVILLE TRACT FISCHER AGENCY SPONSOR DOVER, N.H."
   BY: T.W. CHESLEY
   DATED: SEPTEMBER, 1951
   S.C.R.D.: PLAN #4 POCKET #7 FOLDER #3

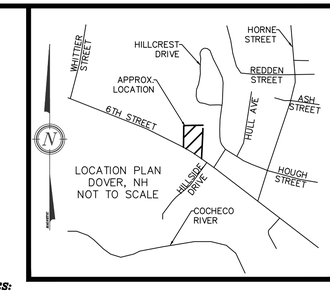


## NOTES:

1.) OWNER: TDAK & COMPANY LLC
9 KELSEY DRIVE
GREENLAND, NH 03840

2.) DOVER TAX MAP 35, LOT 57

3.) LOT AREA: 90,322 Sq. Ft. 2.07 Ac.

4.) S.C.R.D. BOOK 4477, PAGE 557

5.) ZONING: MEDIUM DENSITY RESIDENTIAL (R-12)
SETBACKS:
FRONTAGE: 100 FEET, MINIMUM
MIN. LOT AREA: 12,000 Sq. Ft.
FRONT SETBACK: 15-25 FEET (BUILD TO)
SIDE SETBACK: 15 FEET
REAR SETBACK: 30 FEET
WETLAND SETBACK: 50 FEET

6.) I HEREBY CERTIFY THAT, TO THE BEST OF MY KNOWLEDGE & BELIEF, PART OF THIS PARCEL DOES NOT FALL WITHIN THE FLOOD PLAIN FLOOD HAZARD REF.: FEMA COMMUNITY# –330145, MAP# – 33017C0310E, DATED: SEPTEMBER 30, 2015.

7.) VERTICAL DATUM BASED ON USGS NAVD88 ELEVATIONS. HORIZONTAL COORDINATES BASED ON NAD83. COORDINATES GATHERED USING TOPCON HIPER SR SURVEY GRADE GPS RECEIVERS.

8.) THE BOUNDARY LINES SHOWN ON THIS PLAN ARE THE RESULT OF A CLOSED TRAVERSE PERFORMED BY THIS OFFICE IN JUNE OF 2017, WITH AN ERROR OF CLOSURE OF GREATER THAN 1 PART IN 10,000.

9.) THE INTENT OF THIS PLAN IS TO SHOW THE EXISTING CONDITIONS OF TAX MAP 35 LOT 57.

10.) UNDERGROUND UTILITY LOCATIONS ARE BASED UPON BEST AVAILABLE EVIDENCE AND ARE NOT FIELD VERIFIED. LOCATING AND PROTECTING ANY ABOVE AND BELOW GROUND UTILITIES IS THE SOLE RESPONSIBILITY OF THE CONTRACTOR. ANY UTILITY CONFLICTS SHOULD BE REPORTED IMMEDIATELY TO THE DESIGN ENGINEER.

JURISDICTIONAL WETLANDS WERE DELINEATED BY CINDY BALCIUS OF STONEY RIDGE ENVIRONMENTAL LLC IN JULY OF 2017 UTILIZING THE FOLLOWING STANDARDS:

1) FIELD INDICATORS OF HYDRIC SOILS IN THE UNITED STATES, VERSION 7.0. 2010. L.M. VASILAS, G.W. HURT, AND C.V. NOBLE (EDS.). UNITED STATES DEPARTMENT OF AGRICULTURE, NATURAL RESOURCES CONSERVATION SERVICE, IN COOPERATION WITH THE NATIONAL TECHNICAL COMMITTEE FOR HYDRIC SOILS.
2) FIELD INDICATORS FOR IDENTIFYING HYDRIC SOILS IN NEW ENGLAND. VERSION 3. APRIL 2004. NEIWPCC WETLANDS WORKGROUP. WILMINGTON, MA 01887.
3) NORTH AMERICAN DIGITAL FLORA: NATIONAL WETLAND PLANT LIST, VERSION 2.1.0 (HTTP://WETLAND_PLANTS.USACE.ARMY.MIL). U.S. ARMY CORPS OF ENGINEERS, ENGINEER RESEARCH AND DEVELOPMENT CENTER, COLD REGIONS RESEARCH AND ENGINEERING LABORATORY, HANOVER, NH, AND BONAP, CHAPEN HILL.
4) STATE OF NEW HAMPSHIRE 2014 WETLAND PLANT LIST. LICHVAR, R.W., M. BUTTERWICH, N.C. MELVIN, AND W.N. KIRCHNER. 2014. THE NATIONAL WETLAND PLANT LIST: 2014 UPDATE OF WETLAND RATINGS. PHYTONEURON 2014-41:1-42.
5) CORPS OF ENGINEERS WETLANDS DELINEATION MANUAL. JANUARY 1987. WETLANDS RESEARCH PROGRAM TECHNICAL REPORT Y-87-1.
6) REGIONAL SUPPLEMENT TO THE CORPS OF ENGINEERS WETLAND DELINEATION MANUAL: NORTHCENTRAL AND NORTHEAST REGION. JANUARY 2012, VERSION 2. U.S. ARMY CORPS OF ENGINEERS. ENVIRONMENTAL LABORATORY ERDC/EL TR-12-1.
7) CLASSIFICATION OF WETLANDS AND DEEPWATER HABITATS OF THE UNITED STATES. DECEMBER 1979. L. COWARDIN, V. CARTER, F. GOLET, AND E. LAROE. US DEPARTMENT OF THE INTERIOR. FISH AND WILDLIFE SERVICE. FWS/OBS-79/31.

## STRUCTURES TABLE:

*SMH (DOVER GIS #1039)*
RIM = 84.74
INV. IN = 77.57 (*DOVER GIS #1040*)
INV. OUT = 76.72 (*DOVER GIS #1038*)

*SMH (DOVER GIS #1040)*
RIM = 104.18
INV. IN = 93.43 (*DOVER GIS #1041*)
INV. OUT = 93.28 (*DOVER GIS #1039*)

*SMH (DOVER GIS #1041)*
RIM = 102.85
IN = 94.82
INV. OUT = 94.75 (*DOVER GIS #1040*)

*CB (DOVER GIS #347)*
RIM = 91.92
INV. OUT = 85.37 (*CB DOVER GIS #2446*)

*CB (DOVER GIS #2446)*
RIM = 91.74
INV. IN = 83.39 (*CB DOVER GIS #2447*)
INV. IN = UNABLE TO DETERMINE (*CB DOVER GIS #347*)
INV. OUT = 83.24 (*CB DOVER GIS #575*)

*CB (DOVER GIS #2447)*
RIM = 95.44
INV. IN = 85.92 (*CB DOVER GIS #325*)
INV. OUT = 85.49 (*CB DOVER GIS #2446*)

## STRUCTURES TABLE CONT.:

*CB (DOVER GIS #325)*
RIM = 99.83
INV. IN = 90.59 (*CB DOVER GIS #323*)
INV. OUT = 90.33 (*CB DOVER GIS #2447*)

*CB (DOVER GIS #323)*
RIM = 101.29
INV. IN = 91.14 (*CB DOVER GIS #2445*)
INV. OUT = 90.82 (*CB DOVER GIS #325*)

*CB (DOVER GIS #2445)*
RIM = 103.84
INV. IN = 98.50 (*CB DOVER GIS #2444*)
INV. IN = 91.56 (*DMH DOVER GIS #2443*)
INV. OUT = 91.32 (*CB DOVER GIS #323*)

*CB (DOVER GIS #2444)*
RIM = 103.90
INV. OUT = 98.55 (*CB DOVER GIS #2445*)

*DMH (DOVER GIS #2443)*
RIM = 104.81
INV. IN = 92.54 (*CB DOVER GIS #283*)
INV. OUT = 92.14 (*CB DOVER GIS #2445*)

*CB (DOVER GIS #7576)*
RIM = 104.97
INV. OUT = 99.97 (*UNKNOWN DISCHARGE LOCATION*)

## LEGEND:

- ANGLE IRON/STEEL STAKE (FND)
- IRON PIPE (FND)
- IRON BOUND (FND)
- UTILITY POLE/GUY WIRE
- WATER GATE VALVE
- CURB STOP
- HYDRANT
- CATCH BASIN (CB)
- SEWER MANHOLE (SMH)
- DRAIN MANHOLE (DMH)
- BUILDING SETBACK LINE
- NRCS SOIL DELINEATION LINE
- AREA OF 20% OR GREATER SLOPE
- OHU — OVERHEAD UTILITIES LINE
- EWL — EXISTING WATER LINE
- S.C.R.D. STRAFFORD COUNTY REGISTRY OF DEEDS
- TYP. TYPICAL
- FND FOUND
- PL PROPERTY LINE
- T.B.M. TEMPORARY BENCHMARK
- TH TEST HOLE

GRAPHIC SCALE
30 0 15 30 60 120
( IN FEET )
1 inch = 30 ft.

MAGNETIC
NAD83 NH STATE PLANE
NORTH

## SOILS:

*BuB* – BUXTON SILT LOAM, 3 TO 8% SLOPES
*SfC* – SUFFIELD SILT LOAM, 8 TO 15% SLOPES

SEE WEBSOIL USDA-NRCS
SEE ALSO SITE SPECIFIC SOIL SURVEY, SHEET 3 OF 21

## EXISTING BUILDING COVERAGE:

2,588 Sq. Ft., 0.06 Ac. (2.9% OF LOT)

## EXISTING IMPERVIOUS COVERAGE:

17,250 Sq. Ft., 0.40 Ac. (19.1% OF LOT)

## EXISTING AREA OF 20% OR GREATER SLOPE:

15,225 Sq. Ft., 0.35 Ac. (16.86% OF LOT)

I CERTIFY THAT THIS SURVEY PLAT IS NOT A SUBDIVISION PURSUANT TO THIS TITLE AND THAT THE LINES OF STREETS AND WAYS SHOWN ARE THOSE OF PUBLIC OR PRIVATE STREETS OR WAYS ALREADY ESTABLISHED AND THAT NO NEW WAYS ARE SHOWN.

4-18-18
KENNETH A. BERRY L.L.S. 805 DATE

I CERTIFY THAT THIS PLAT EXCEEDS THE MINIMUM REQUIREMENT FOR ACCURACY AND COMPLETENESS OF THE STATE OF N.H. AND OF THE CITY OF DOVER, N.H.– 1:10,000 –

4-18-18
KENNETH A. BERRY LLS 805 DATE

DOVER FILE #P18-07

| REVISION | DATE | DESCRIPTION |
|---|---|---|
| #1 | 4-16-18 | REVISED PER TRC COMMENTS OF 4-5-18 |

EXISTING CONDITIONS

RESIDENTIAL SITE REVIEW
LAND OF
TDAK & COMPANY LLC
99 SIXTH STREET
DOVER, N.H.
*TAX MAP 35, LOT 57*

BERRY SURVEYING & ENGINEERING
335 SECOND CROWN POINT ROAD
BARRINGTON, NH 03825 (603)332-2863

SCALE : 1 IN. EQUALS 30 FT.
DATE : MARCH 28, 2018
FILE NO. : DB 2017-060

STATE OF NEW HAMPSHIRE NO. 805 LICENSED LAND SURVEYOR KENNETH A. BERRY SIGNATURE

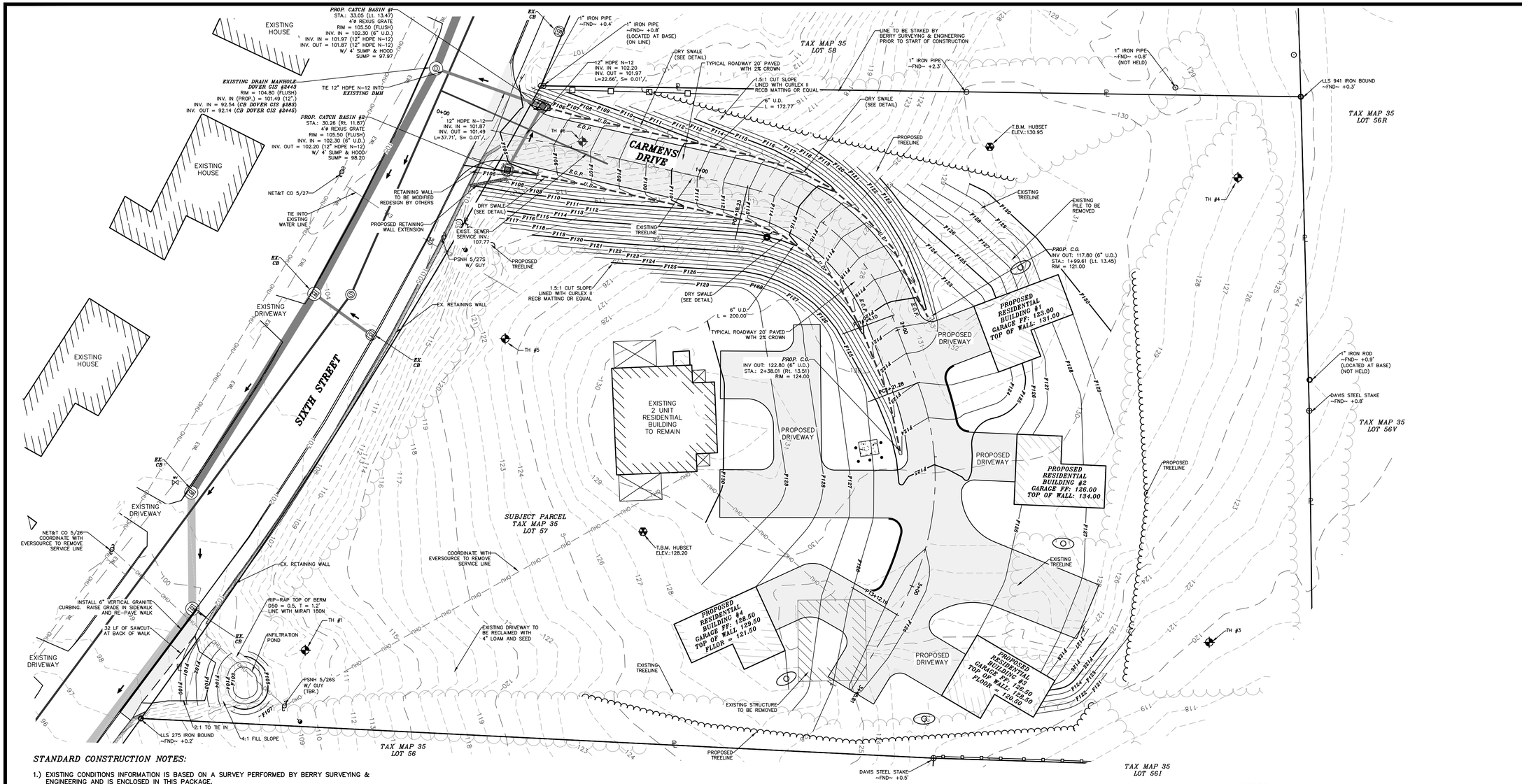


## STANDARD CONSTRUCTION NOTES:

1.) EXISTING CONDITIONS INFORMATION IS BASED ON A SURVEY PERFORMED BY BERRY SURVEYING & ENGINEERING AND IS ENCLOSED IN THIS PACKAGE.

2.) THIS PROJECT SHALL BE CONSTRUCTED IN ACCORDANCE WITH NHDOT STANDARD SPECIFICATIONS DATED 2016. CURRENT STANDARD PLANS, SUPPLEMENTAL SPECIFICATIONS AND SPECIAL PROVISIONS INCLUDED IN THE PROPOSAL.

3.) CONTRACTOR SHALL TAKE SPECIAL CARE IN NOT DISTURBING EXISTING MONUMENTS BOUNDS, AND OR BENCHMARKS WITHOUT FIRST MAKING PROVISIONS FOR RELOCATION

4.) THE LOCATIONS OF EXISTING UNDERGROUND UTILITIES ARE SHOWN IN AN APPROXIMATE WAY ONLY AND HAVE NOT BEEN INDEPENDENTLY VERIFIED BY THE OWNER OR ITS REPRESENTATIVE. THE CONTRACTOR SHALL DETERMINE THE EXACT LOCATION OF ALL EXISTING UTILITIES BEFORE COMMENCING WORK AND AGREES TO BE FULLY RESPONSIBLE FOR ANY AND ALL DAMAGES WHICH MIGHT BE OCCASIONED BY THE CONTRACTOR'S FAILURE TO LOCATE EXACTLY AND TO PRESERVE ANY AND ALL UNDERGROUND UTILITIES CALL "DIG-SAFE" 1-888-DIGSAFE (344-7233) AT LEAST 72 HOURS BEFORE COMMENCING CONSTRUCTION

5.) WHERE AN EXISTING UNDERGROUND UTILITY IS FOUND TO CONFLICT WITH THE PROPOSED WORK, THE LOCATION, ELEVATION AND SIZE OF THE UTILITY SHALL BE ACCURATELY DETERMINED WITHOUT DELAY BY THE CONTRACTOR, AND THE INFORMATION FURNISHED TO THE ENGINEER FOR RESOLUTION OF THE CONFLICT.

6.) THE CONTRACTOR SHALL MAKE ALL ARRANGEMENTS FOR THE ALTERATION AND ADJUSTMENT OF GAS, ELECTRIC, TELEPHONE AND ANY OTHER PRIVATE UTILITIES BY THE UTILITY COMPANIES.

7.) AREAS OUTSIDE THE LIMITS OF PROPOSED WORK DISTURBED BY THE CONTRACTOR'S OPERATIONS SHALL BE RESTORED BY THE CONTRACTOR TO THEIR ORIGINAL CONDITION AT THE CONTRACTOR'S EXPENSE.

8.) THE TERM "PROPOSED" (PROP.) MEANS WORK TO BE CONSTRUCTED USING NEW MATERIALS, OR, WHERE APPLICABLE, RE-USING EXISTING MATERIALS IDENTIFIED AS "REMOVE & RESET" (R & R)

9.) ALL SYMBOLS, WORDS, TRANSVERSE MARKINGS (STOP BARS, CROSSWALK LINES, AND RAILROAD SYMBOLS), LANE LINES, AND ALL OTHER MARKINGS NOTED WITH {T} SHALL BE THERMOPLASTIC

10.) ALL DISTURBED AREAS NOT DESIGNATED TO BE PAVED SHALL HAVE LOAM PLACED AND SEEDED. THE LOAM SHALL HAVE A MINIMUM DEPTH OF 4 INCHES AND SHALL BE PLACED FLUSH WITH THE TOP OF THE ADJACENT CURB, EDGING, BERM OR PAVEMENT SURFACE.

## STANDARD CONSTRUCTION NOTES CONT:

11.) COMMERCIAL VEHICLE ROUTE DURING CONSTRUCTION SHALL CONFORM WITH CITY OF DOVER CODE OR BE COORDINATED WITH THE COMMUNITY SERVICES DIRECTOR.

12.) ALL CATCH BASINS SHALL BE PRE-CAST H-20 LOADING AND SHALL BE EQUIPPED WITH DEEP SUMPS (4' MIN.) AND HOODS (SEE DETAILS) HOODS ARE TO BE "THE ELIMINATOR" BY KLEANSTREAM. RIMS ARE TO BE REXUS STYLE AND SHALL BE SET FLUSH WITH FINISH GRADE, UNLESS OTHERWISE INSTRUCTED DURING CONSTRUCTION BY DOVER DPW. RIMS ABOVE FINISH GRADE WILL BE NOT BE ACCEPTED. ALL RIMS, GRATES AND COVERS ARE TO BE U.S.A MADE.

## NOTES:

1.) THE INTENT OF THIS PLAN SET IS TO SHOW THE OVERVIEW OF THE SITE GRADING AT 99 SIXTH STREET.

2.) CURRENT OWNER: TDAK & COMPANY LLC
9 KELSEY DRIVE
GREENLAND, NH 03840

3.) APPLICANT: TDAK & COMPANY LLC
9 KELSEY DRIVE
GREENLAND, NH 03840

4.) TAX MAP 35, LOT 57 OF THE CITY OF DOVER TAX ASSESSOR'S MAPS.

MAGNETIC
MAINE NH STATE PLANE
N

GRAPHIC SCALE

20 0 10 20 40 80

( IN FEET )
1 inch = 20 ft.

DOVER FILE #P18-07

| REVISION | DATE | DESCRIPTION |
|---|---|---|
| #1 | 4-16-18 | REVISED PER TRC COMMENTS OF 4-5-18 |

GRADING AND DRAINAGE PLAN
RESIDENTIAL SITE REVIEW
LAND OF
TDAK & COMPANY LLC
99 SIXTH STREET
DOVER, N.H.
*TAX MAP 36, LOT 38, LOT 57*

BERRY SURVEYING & ENGINEERING
335 SECOND CROWN POINT ROAD
BARRINGTON, NH 03825 (603)332-2863

SCALE : 1 IN. EQUALS 20 FT.
DATE : MARCH 28, 2018
FILE NO. : DB 2017-060

STATE OF NEW HAMPSHIRE
KENNETH A. BERRY
No. 10043
LICENSED
PROFESSIONAL ENGINEER

SHEET 7 OF 22

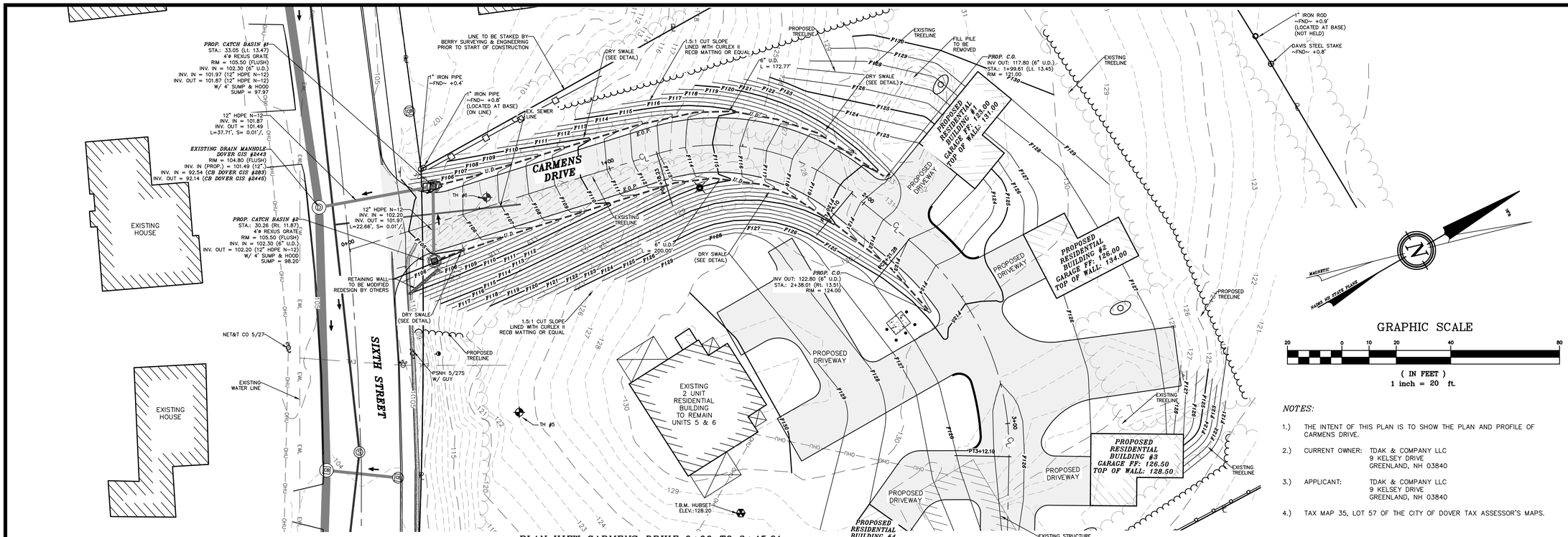


PLAN VIEW CARMENS DRIVE 0+00 TO 3+45.61

PROFILE VIEW CARMENS DRIVE 0+00 TO 3+45.61

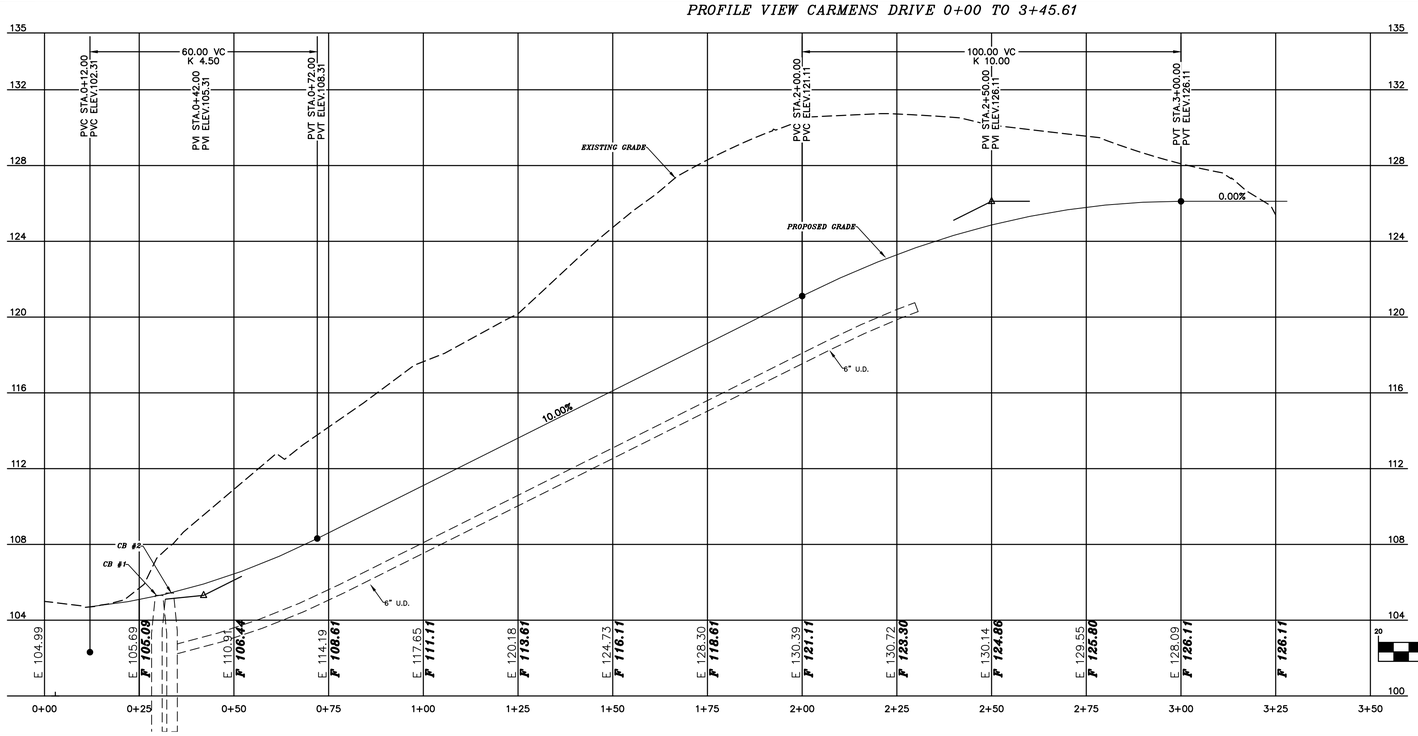


## NOTES:

1.) THE INTENT OF THIS PLAN IS TO SHOW THE PLAN AND PROFILE OF CARMENS DRIVE.

2.) CURRENT OWNER: TDAK & COMPANY LLC
9 KELSEY DRIVE
GREENLAND, NH 03840

3.) APPLICANT: TDAK & COMPANY LLC
9 KELSEY DRIVE
GREENLAND, NH 03840

4.) TAX MAP 35, LOT 57 OF THE CITY OF DOVER TAX ASSESSOR'S MAPS.

## STANDARD CONSTRUCTION NOTES CONT:

5.) ALL ELEVATIONS TO BE VERIFIED BY THE CONTRACTOR PRIOR TO CONSTRUCTION. THE DESIGN ENGINEER IS TO BE NOTIFIED IMMEDIATELY OF ANY DISCREPANCY. TEMPORARY BENCHMARKS (T.B.M.) ARE TO BE PROVIDED BY THE DESIGN ENGINEER.

6.) NOTE THAT THE PROJECT IS NOT SUBJECT TO THE EPA NPDES PHASE II. PER THE CITY OF DOVER STORMWATER REGULATIONS, A WEEKLY INSPECTIONS WILL BE CONDUCTED BY THE DESIGN ENGINEER.

7.) UPON FINAL COMPLETION AND 85% STABILIZATION THE DRAINAGE SYSTEM IS TO BE CLEANED OF ALL DEBRIS TO INCLUDE THE PUMPING OF THE BASIN SUMPS.

8.) ALL BASINS AND DRAINS ARE TO HAVE BOOTS INSTALLED ON ALL INLETS AND OUTLETS

9.) ALL TREATMENT SWALE TO BE CONSTRUCTED SHALL HAVE SOD BOTTOMS UNLESS OTHERWISE INSTRUCTED BY THE DESIGN ENGINEER DURING CONSTRUCTION.

10.) A LETTER OF CREDIT FOR THE COST OF RE-VEGETATING ALL DISTURBED AREAS ON THE SITE SHALL BE SUBMITTED PRIOR TO ANY EARTH DISTURBING ACTIVITY OCCURS, AS MAY BE APPLICABLE.

11.) A PRE-CONSTRUCTION CONFERENCE WITH THE DEVELOPER, THE DESIGN ENGINEER, THE EARTHWORK CONTRACTOR AND DOVER CITY STAFF SHALL OCCUR PRIOR TO ANY EARTH DISTURBING ACTIVITY.

12.) BUILDING ADDRESSES SHALL BE DETERMINED BY THE BUILDING OFFICIAL.

13.) THE FOLLOWING FEDERAL AND STATE PERMITS HAVE BEEN ISSUED FOR THE SUBJECT PROPERTY:
1.) NHDES SEWER DISCHARGE PERMIT

14.) THIS RESIDENTIAL SITE PLAN PLAN PROPOSES 35,600 ± SQ. FT. OF DISTURBANCE. PER ENV-WQ 1503.12 (B) AN ALTERATION OF TERRAIN PERMIT IS NOT REQUIRED.

15.) WRITTEN DIMENSION ON THIS PLAN TAKE PRECEDENCE OVER SCALED DIMENSIONS. THE CONTRACTOR SHALL USE CAUTION WHEN SCALING REPRODUCED PLANS. IN THE EVENT OF A CONFLICT BETWEEN THIS PLAN SET AND ANY OTHER DRAWINGS AND/OR SPECIFICATIONS, THE ENGINEER SHALL BE NOTIFIED BY THE CONTRACTOR PRIOR TO CONSTRUCTION. CONTRACTOR IS TO CONFIRM ALL ELEVATIONS. CONFLICTS WILL BE REPORTED TO THE DESIGN ENGINEER PRIOR TO CONSTRUCTION.

DOVER FILE #P18-07

| REVISION | DATE | DESCRIPTION |
|---|---|---|
| #1 | 4-16-18 | REVISED PER TRC COMMENTS OF 4-5-18 |

PLAN AND PROFILE 0+00-END CARMENS DRIVE
RESIDENTIAL SITE REVIEW
LAND OF
TDAK & COMPANY LLC
99 SIXTH STREET
DOVER, N.H.
TAX MAP 35, LOT 57

BERRY SURVEYING & ENGINEERING
335 SECOND CROWN POINT ROAD
BARRINGTON, NH 03825 (603)332-2863

SCALE : 1 IN. EQUALS 20 FT.
DATE : MARCH 28, 2018
FILE NO. : DB 2017-060

STATE OF NEW HAMPSHIRE
KENNETH A. BERRY No. 7424
LICENSED PROFESSIONAL ENGINEER

***SOILS & DEWATERING:***

| | | |
|---|---|---|
| ***BxB*** – | BUXTON SILT LOAM, 3 TO 8% SLOPES | ***K = 0.32 UNDISTURBED*** |
| ***SfC*** – | SUFFIELD SILT LOAM, 8 TO 15% SLOPES | ***K = 0.37 UNDISTURBED*** |

***SEE SITE SPECIFIC SOILS MAP (SSSM)***
SEE WEBSOIL USDA–NRCS
ERODIBILITY FACTOR – K, OPESC MANUAL, ENVIROCERT INTERNATIONAL INC. & ROCKINGHAM COUNTTY SOIL SURVEY, ROCKWEB SOIL ATTRIBUTES.

THE SOIL ERODIBILITY FACTOR (K) OF THE SOILS ARE RELATIVELY HIGH (K=0.32.) TO (K=.37). THESE VALUES ARE BASED UPON AN UNDISTURBED ANALYSIS, DISTURBED VALUES ARE HIGHER. CONTRACTOR TO BE AWARE OF THE SOIL PROFILES AND ENSURE THAT PROPER EROSION PREVENTION AND SEDIMENT CONTROL MEASURES ARE TAKEN AT ALL TIMES. ANY DEWATERING REQUIREMENTS IN NEW HAMPSHIRE REQUIRE SPECIAL PROVISIONS IN ACCORDANCE WITH THE "CLARIFICATION OF SECTION 9.1.2 (STATE OF NEW HAMPSHIRE CONDITIONS) AND OTHER NH SPECIFIC INFORMATION FOR THE U.S. EPA 2012 NPDES CONSTRUCTION GENERAL PERMIT (CGP)" DATED MAY 3, 2012 INCLUDED IN THE SWPPP.

COVER MANAGEMENT DURING CONSTRUCTION FOR EXPOSED SOIL WILL INCLUDE HAY / STRAW APPLIED AT A RATE OF 2.0 TONS PER ACRE, TEMPORARY SEEDING OF ANNUAL RYE GRASS, AND PERMANENT SEEDING AT THE EARLIES OPPORTUNITY. SEE ADDITIONAL REQUIREMENT FOR STABILIZATION ON THE EROSION AND SEDIMENT CONTROL DETAIL SHEETS, E–101 AND E–102.

THE CONSTRUCTION SCHEDULE WILL BE MANAGED SO THAT ALL STORMWATER STRUCTURES WILL BE BUILT AND STABILIZED PRIOR TO RECEIVING SURFACE WATER RUNOFF. CONTRACTOR TO BE RESPONSIBLE FOR ALL DIVERSIONS DURING CONSTRUCTION AND FOR INTERIM SEDIMENT AND EROSION CONTROL MEASURES.

GRAPHIC SCALE
20 0 10 20 40 80
( IN FEET )
1 inch = 20 ft.

MAGNETIC
NAD83 NH STATE PLANE
15°±

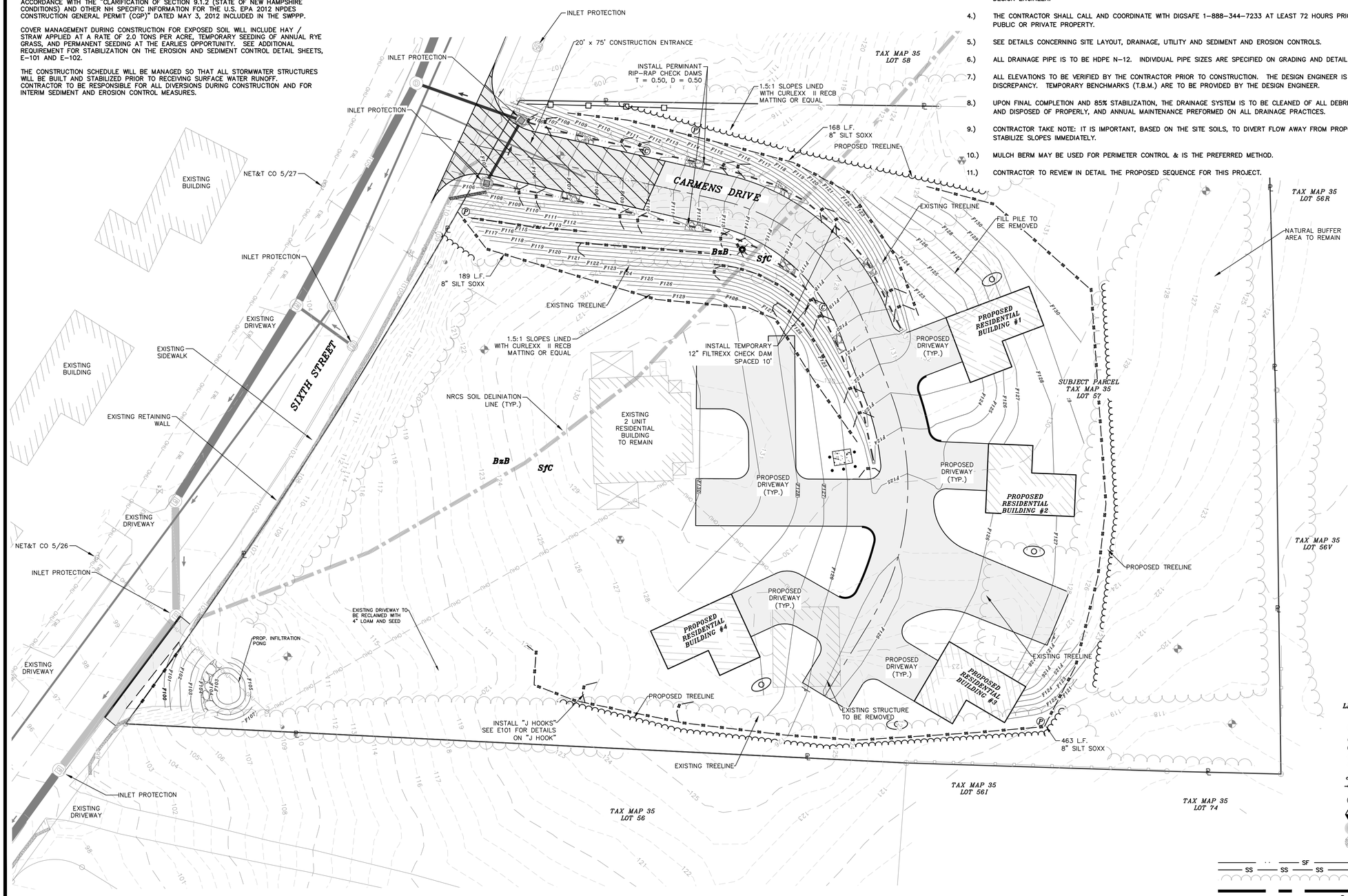


***NOTES:***

1.) OWNER: TDAK & COMPANY L.L.C.
99 SIXTH STREET,
DOVER, NH 03820

A.) TAX MAP 35, LOT 57

2.) THE PURPOSE OF THIS PLAN IS TO DEMONSTRATE PROPER EROSION AND SEDIMENT CONTROL DURING CONSTRUCTION PRACTICES FOR PHASE TWO

3.) UNDERGROUND UTILITY LOCATIONS ARE BASED UPON BEST AVAILABLE EVIDENCE AND ARE NOT FIELD VERIFIED. LOCATING AND PROTECTING ANY ABOVE AND BELOW GROUND UTILITIES IS THE SOLE RESPONSIBILITY OF THE CONTRACTOR. ANY UTILITY CONFLICTS SHOULD BE REPORTED IMMEDIATELY TO THE DESIGN ENGINEER.

4.) THE CONTRACTOR SHALL CALL AND COORDINATE WITH DIGSAFE 1–888–344–7233 AT LEAST 72 HOURS PRIOR TO COMMENCING ANY EXCAVATION ON PUBLIC OR PRIVATE PROPERTY.

5.) SEE DETAILS CONCERNING SITE LAYOUT, DRAINAGE, UTILITY AND SEDIMENT AND EROSION CONTROLS.

6.) ALL DRAINAGE PIPE IS TO BE HDPE N–12. INDIVIDUAL PIPE SIZES ARE SPECIFIED ON GRADING AND DETAIL PLAN SHEETS.

7.) ALL ELEVATIONS TO BE VERIFIED BY THE CONTRACTOR PRIOR TO CONSTRUCTION. THE DESIGN ENGINEER IS TO BE NOTIFIED IMMEDIATELY OF ANY DISCREPANCY. TEMPORARY BENCHMARKS (T.B.M.) ARE TO BE PROVIDED BY THE DESIGN ENGINEER.

8.) UPON FINAL COMPLETION AND 85% STABILIZATION, THE DRAINAGE SYSTEM IS TO BE CLEANED OF ALL DEBRIS. SEDIMENT CONTROL PRACTICES REMOVED AND DISPOSED OF PROPERLY, AND ANNUAL MAINTENANCE PREFORMED ON ALL DRAINAGE PRACTICES.

9.) CONTRACTOR TAKE NOTE: IT IS IMPORTANT, BASED ON THE SITE SOILS, TO DIVERT FLOW AWAY FROM PROPOSED SLOPES DURING CONSTRUCTION. STABILIZE SLOPES IMMEDIATELY.

10.) MULCH BERM MAY BE USED FOR PERIMETER CONTROL & IS THE PREFERRED METHOD.

11.) CONTRACTOR TO REVIEW IN DETAIL THE PROPOSED SEQUENCE FOR THIS PROJECT.

***LEGEND:***

- (R) RAIN GARDEN BIO–MEDIA PROTECTION
- (P) PERIMETER CONTROL
- (C) RESIDENTIAL/ROADWAY CONSTRUCTION
- IRON PIPE (FND)
- IRON BOUND (FND)
- REBAR (FND)
- UTILITY POLE
- GUY WIRE
- (W) WELL
- BENCHMARK
- CONIFEROUS TREE
- DECIDUOUS TREE
- SF — SILT FENCE
- SS — FILTREXX SILTSOXX
- TREE LINE
- NRCS SOIL DELINEATION
- GsB — SOIL TYPE

DOVER FILE #P18–07

| REVISION | DATE | DESCRIPTION |
|---|---|---|
| #1 | 4–16–18 | REVISED PER TRC COMMENTS OF 4–5–18 |

EROSION AND SEDIMENT CONTROL PLAN
RESIDENTIAL SITE REVIEW
LAND OF
TDAK & COMPANY LLC
99 SIXTH STREET
DOVER, N.H.
***TAX MAP 35, LOT 57***


BERRY SURVEYING & ENGINEERING
335 SECOND CROWN POINT ROAD
BARRINGTON, NH 03825 (603)332–2863


SCALE : 1 IN. EQUALS 20 FT.
DATE : MARCH 28, 2018
FILE NO. : DB 2017–060

STATE OF NEW HAMPSHIRE
KENNETH A. BERRY
No. 7424
LICENSED
PROFESSIONAL ENGINEER